FLOTT
Machine Tools

Grinding machines

Drilling machines

Metal sawing machines

Product range 2017/2018

FLOTT

Product range
2017/2018

FLOTT
Machine Tools

Arnz FLOTT GmbH
Werkzeugmaschinen

Vieringhausen 131
42857 Remscheid/Germany
Tel. +49 2191 979-0
Fax +49 2191 979-222
info@flott.de
www.flott.de

FLOTT - High Quality – made in Germany since 1854

In 1854, a small family business was founded in Remscheid, Germany which developed and manufactured breast drills and drilling equipment of the finest quality for the German market. With these simple machines and the over the years invented drill presses, the company Arnz FLOTT Machine Tools wrote history in the machine tool industry segment and is therefore recognized and often cited as the "pioneer" of the drilling technology.

Today FLOTT is due to its outstanding experience in engineering and product quality already well established in the international machine markets. Always close to our customers - "High Quality – made in Germany". With our global partners FLOTT is not only the oldest, but also one of the leading manufacturers of advanced, high-quality drilling-, grinding - and sawing machines in Europe.

Tradition commits – to innovation!

Standstill would be anything but FLOTT. As a future- and user-oriented company FLOTT continues to invest constantly nearly 5% of the annual sales for research and product development. Continuous improvements of our products and above all, intelligent solutions, industry-specific innovations in drilling-, sawing- and grinding technology - evidenced by numerous patents, copyrights, customer- and design awards – speak for the innovative and legendary pioneering spirit of FLOTT.

This means, by purchasing a FLOTT machine our customers can always rely on getting a perfectly developed, state-of-the-art and technically sophisticated as well as user ergonomics orientated high quality machine. With a better warranty and additional benefits included: Traditionally the high quality and service... Since 1854!

Service decides – on customer satisfaction

With stationary, modern training facilities for courses in theory and practice of the FLOTT drilling academy located at the FLOTT headquarter and production plant in Remscheid and at several FLOTT trade missions, we want to meet customers' expectations and needs highly efficient.

Service also means that as soon as necessary, a repair will be carried out in order to reduce the machine's downtime to a minimum. FLOTT offers a Europe wide service. If needed, we will capacitate your machine within 24 hours. Accordingly, a 24-hour spare parts shipment is possible.

These are just a few points of the FLOTT service concept. For additional information, please visit our website at www.flott.de, or contact your local FLOTT representative.

Zertifiziertes Qualitätsmanagementsystem
AGQS
DIN EN ISO 9001:2008

FLOTT is a certified manufacturer according to DIN ISO

AGQS

CERTIFICATE

The AGQS Qualitäts- und Umweltmanagement GmbH hereby certifies that the company

FLOTT Werkzeugmaschinen

Arnz Flott GmbH Werkzeugmaschinen
Vieringhausen 131
D-42857 Remscheid

at the locations

Vieringhausen 131, D-42857 Remscheid
Weststraße 42, D-42857 Remscheid

for the scope

development, marketing and distribution as well as assembly of tooling machines for drilling, sawing and grinding processing

has implemented and maintains a management system. An audit, documented in a report, has verified that this management system fulfils the requirements of the following standard:

DIN EN ISO 9001:2015

DAkkS Deutsche Akkreditierungsstelle D-ZM-18078-01-00

Remscheid, 2017-08-01

Audit	297-QMS-R30
Certificate	297-QMS-08-03
Valid from	2017-07-28
Valid until	2020-07-27
1st certification	2008-07-28

AGQS Qualitäts- und Umweltmanagement GmbH
Elberfelder Straße 77 · D-42853 Remscheid
Telefon +49 2191 438 24
Telefax +49 2191 438 26
email@agqs.de

FLOTT Machine Tools

Table of Contents

Overview Drilling Machinery 4
Overview Grinding Machinery 5
Overview Metal Sawing Machinery 6

Drilling Machinery 7
Education & Training 8
Product Guide Drilling Machines 9
FLOTT-Highlights 10
FLOTT Machine Safety 11
FLOTT Options/ Accessories 60
Dimensions Drilling Machines 70

Grinding Machinery 71
Accessories Belt Grinding Machines 86
Accessories/Spare Parts Grinding Technology 87
Dimensions Grinding Machines 88

Metal Sawing Machinery 89
Accessories Metal Sawing Machines 110

FLOTT Service 112
FLOTT Extract from our terms of delivery 113
FLOTT Distribution and Service partners worldwide 113
Notes 114

Table of Content Drilling Machinery

	Drilling Capacity mm	Tapping Capacity	Speed rpm/min	Motor kW		Page
TB 10 Eco Plus	12	–	250-3,000	0.45	Single phase AC 230 V	13
Turbo Drill	6/8	max. M5	100-10,000	0.54	Three phase motor AC 230 V (frequency converted)	15
TB 10 Plus	10/12	max. M6	60-6,000	0.54	Three phase motor AC 230 V (frequency converted)	15
TB / TBZ / SB 13 Plus	13/15	max. M8	40-4,000	0.54	Three phase motor AC 230 V (frequency converted)	17
TB / TBZ / SB 15 Plus	15/18	max. M10	40-4,000	0.75	Three phase motor AC 230 V (frequency converted)	19
BS 15 Plus	15/18	max. M10	40-4,000	0.75	Three phase motor AC 230 V (frequency converted)	21
TB / TBZ / SB 18 Plus	18/20	max. M12	30-3,000	0.75	Three phase motor AC 230 V (frequency converted)	23
TB / TBZ / SB 23 Plus	23/25	max. M16	20-2,000	1.5	Three phase motor AC 400 V (frequency converted)	25
SB E3	20/25	–	250-4,000	0.45/0.80	Three phase AC 400 V pole-changing	27
SB E4	25/30	–	125-2,500	0.9/1.3	Three phase AC 400 V pole-changing	29
SB M3 ST / MV	25/30	max. M20	125-4,000	0.9/1.45	Three phase AC 400 V pole-changing	31
SB P30 ST / STG PV elec.	25/30	max. M20	125-4,000	0.9 / 1.45	Three phase AC 400 V pole-changing	33
SB E5	30/35	–	80-1,600	0.9/1.45	Three phase AC 400 V pole-changing	35
SB M4 ST / MV	30/35	max. M24	125-2,000	1.5/2.0	Three phase AC 400 V pole-changing	37
SB P35 ST / STG PV elec.	30/35	max. M24	125-2,000 R1 80-1,280 R2	1.5/2.0	Three phase AC 400 V pole-changing	39
SB M5 ST / MV	35/40	max. M30	100-2,000	1.5/3.0	Three phase AC 400 V pole-changing	41
SB P40 ST / STG PV elec.	35/40	max. M30	100-2,000 R1 70-1,400 R2	1.5/3.0	Three phase AC 400 V pole-changingr	43
GB 50 MV	50	max. M36	Geardrive	3.0	Three phase motor 400 V single speed	45
GB 50 MV Plus	50	max. M36	Geardrive	3.0	Three phase motor 400 V single speed	47
SB P50 STG MV*	50	max. M42	Geardrive	4.0	Three phase motor 400 V single speed	49
GB 70 MV Plus	70	max. M50	Geardrive	5.5	Three phase motor 400 V single speed	51
	Flow drilling capacity (3 mm sheet metal)					
SB M3 ST-FB	18	–	500-4,000	3.0	Three phase motor 400 V single speed	53
SB P40 ST-FB/ STG-FB PV elec.	20	–	500-4,000 R1 250-4,000 R2	3.0 1.5/3.0	Three phase motor 400 V single speed Three phase AC 400 V pole-changing	55

Colour Mapping

Plus-series | E-series | M-series | P-series | Gear Driven Drilling Machine

*Combined of belt and gear drive

FLOTT Machine Tools

Table of Content Grinding Machinery

Bench Grinding Machines		TS 150 SW	TS 175 SW	TS 150 SD P	TS 175 SD P	TS 200 SD P	TS 250 SD P	TS 300 SD P	TSB 250 P
Wheel diameter	mm	150 x 25 x 32	175 x 25 x 32	150 x 25 x 32	175 x 25 x 32	200 x 32 x 32	250 x 40 x 51	300 x 40 x 51	250 x 40 x 51
Speed	rpm/min	2,800	2,800	2,840	2,740	2,550	1,400	1,250	1,400
Motor single-phase AC 230 V AC	kW	0.52	0.52	–	–	–	–	–	–
Motor three-phase AC 400 V AC	kW	–	–	0.6	0.7	1.0	1.4	2.2	1.4
Weight	kg	14	15	14	15	20	32	40	35
Suction nozzle Ø	mm	42	42	42	42	42	42	42	49
	Page	73	73	73	73	75	75	75	83

Belt Grinding Machines		BSM 75	BSM 75 A	BSM 75 A/pol	BSM 150	BSM 150 A	BSM 150 A/pol
Sanding belt length	mm	2,000	2,000	2,000	2,000	2,000	2,000
Sanding belt width	mm	75	75	75	150	150	150
Motor three-phase AC 400 V AC	kW	3.75	3.75	3.0/3.75	3.75	3.75	3.0/3.75
Weight	kg	80	100	105	90	100	115
Motor exhaustion	kW	–	0.37	0.37	–	0.37	0.37
	Page	85	85	85	85	85	85

Foot Stand with Dust Extraction		MA 400 D	MA 600 D
Motor three-phase AC 230/400 V AC	kW	–	0.55
Motor single-phase AC 230 V AC	kW	1.1	–
Speed	rpm/min	1,600	2,800
Extraction	m³/h	250	350
Weight	kg	25	45
	Page	81	81

Deburring Machine		BEM 250 Plus	BEM 250 Pro
Steel brush diameter	mm	250	3pieces: 250
Steel brush width standard	mm	60	60
Rotational speed/ pole-changing	rpm/min	2,800/1,400	600-2,700
Driving power (Three phase motor)	kW	2.1/1.8	3.0
Weight	kg	85	41
	Page	77	79

Table of Content Metal Sawing Machinery

Metal Band Saws	Sawing band dimensions	○* at 0°	▭* at 0°	□* at 0°	cataloge page
HBS 225 MA	2,720 x 27 x 0.9	230	275 x 200	230 x 230	91
HBS 225 A	2,720 x 27 x 0.9	230	275 x 180	230 x 230	93
HBS 250 A	2,910 x 27 x 0.9	250	320 x 190	240 x 240	95
HBS 250 HA	2,910 x 27 x 0.9	250	320 x 190	240 x 240	97
HBS 350 HA	4,780 x 34 x 1.1	350	510 x 350	350 x 350	99
HBS 450 HA	5,200 x 34 x 1.1	450	610 x 450	450 x 450	101
HBS 350 ANC	4,780 x 34 x 1.1	350	510 x 350	350 x 350	103
HBS 350 SANC	4,780 x 34 x 1.1	350	420 x 350	350 x 350	105
HBS 450 SANC	6,020 x 41 x 1.3	450	520 x 450	450 x 450	107

Metal Circular Saw	circular saw blade	○* at 0°	▭* at 0°	□* at 0°	
KS 315 M	315 x 32	95	100 x 70	80	109

*Mitre cuts are possible, for details please check the specified catalogue pages.

Explaination of abbreviations

HBS: High Performance Band Saw
MA: Manual lowering
A: Lowering (hydraulic cylinder)
HA: Semi-automatic
ANC: Automatic NC controlled
SANC: Column-guided machine NC controlled

FLOTT
Machine Tools

High Quality –
made in Germany
since 1854.

FLOTT Products
Drilling Machinery

Education & Training

FLOTT Training Charts

The safe use of all kinds of drilling machines is explained by this FLOTT training charts. Additionally the different types of drill press machines, working methods as well as the correct use of all common clamping devices are described here for the object training in schools and training facilities. This helpful FLOTT training charts is available free of charge on request.

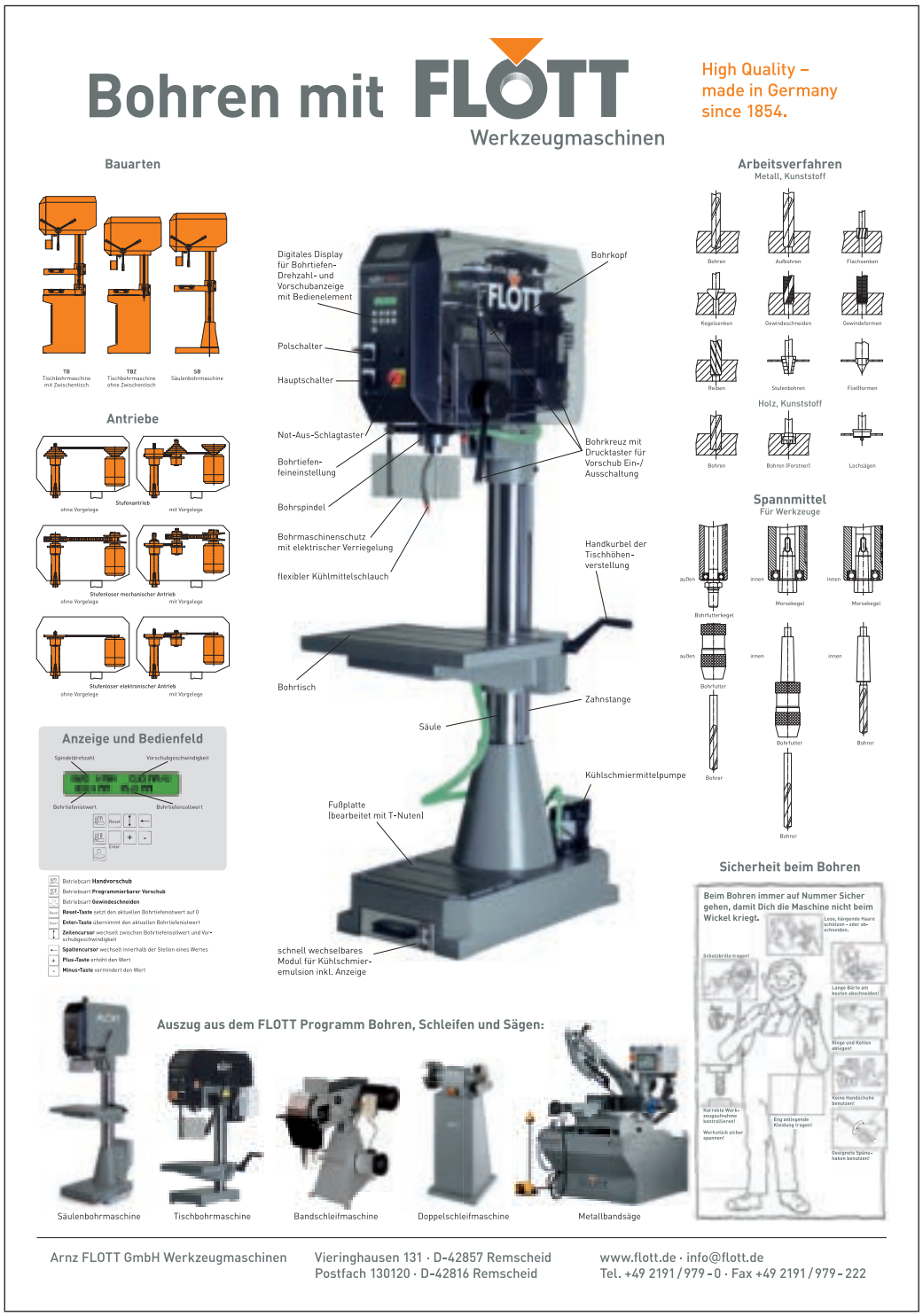

FLOTT Machine Tools

Product Guide Drilling Machines

FLOTT offers the customer a wide selection of high quality drilling machines, which allows the user to select an optimal machine for working in the drilling range from 0.5 to 70 mm.

The machines are sorted by their drilling and tapping capacities. Among the assembly groups, the essential accessories and optional equipment available are listed.

All FLOTT machines are characterized by a modern and ergonomic design and the brands technological advance is documented by numerous patents and trademarks.

A lot of the FLOTT drilling machines are standardly equipped with modern electronic devices such as digital depth and speed indicating displays as well as electronic continuously variable drives in order to facilitate the operation of our machines.

The extraordinary product quality, durability and longevity of the FLOTT machines are appreciated worldwide.

Product safety has top priority to us and it has always been. All FLOTT machines do fulfill the high European safety regulations and standards (CE) in total.

You do have further questions? The FLOTT-Team is glad to help and give advice according to your individual needs!

Types of Drilling Machines

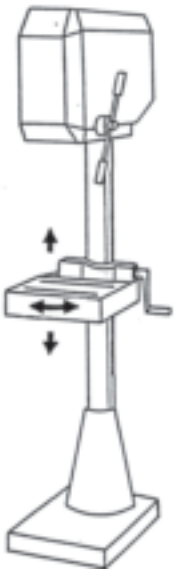

SB
Column Drilling Machine

TB
Bench Drilling Machine with Table

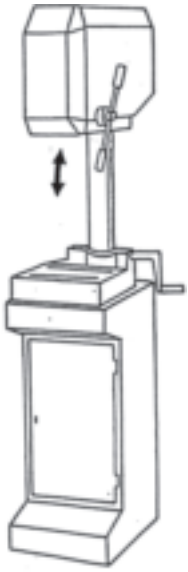

TBZ
Bench Drilling Machine without Table with rack

Additional Abbreviations

FB	Flow-Forming
G electronic	Tapping device, electronically controlled
MV	Mechanical movement, with electromagnetic coupling
PV electronic	Programmable feed with electromagnetic coupling feed, electronically controlled; digital multi-functional display
ST	Continuous variable drive
GB	Gear drilling machine

FLOTT-Highlights

Model range Plus-family

The Control Panel with Display

- Clearly laid out operating panel with a central metal rotary knob
- OLED – Display (organic light-emitting diode)
- Dust protected housing of the machine control
- Easy disassembly of the control unit for maintenance (only 4 screws)
- Just one cable duct to the frequency converter and depth sensor

The Menu Features

- Clear and understandable input menu
- Mode selection between drilling and tapping
- Two precise display values for target- and actual drilling depth as well as the speed
- Counting function of drilling/threading strokes
- Intelligent memory function of the set parameters
- Automatic power saving mode

Efficient Integrated LED Lighting System

The Power LED lights up the drill hole.
The material does not cast disturbing shadows.
Layout with two LED: Turbo Drill, 10 Plus, 13 Plus, 15 Plus
Layout with one LED: TB 10 Eco Plus, 18 Plus, 23 Plus
Also any kind of visual clarity for the machine operator is enhanced by the arrangement and the integrated lens system of the LEDs.

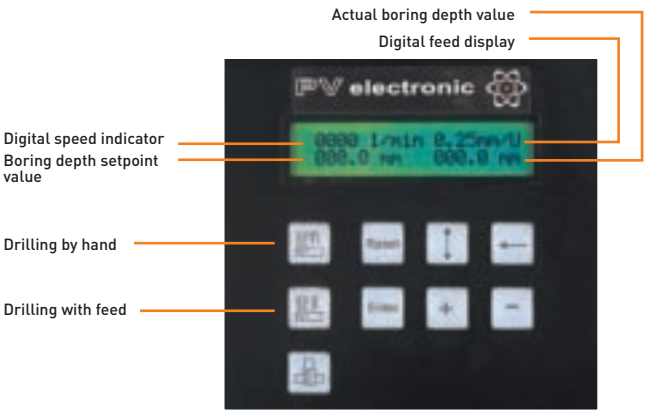

Machine Height Adjustment

Programmable drilling feed PV electronic

Our latest development, the patented programmable drilling feed PV electronic has state-of-the-art, electronically controlled drilling feed rate with an electromagnetic coupling.

All significant process data are digitally displayed and can be changed effectively and intuitively by keyboard at any time.

Apart from the standard functions "Manual Drilling" and "Feed Drilling", the series model PV electronic also features electronic thread-cutting and peck-drilling cycles.

The standard equipment of this highly sophisticated feed controller can be individually supplemented by the following optional software modules:

· Security module

· Chip-breaker module

· Multi Feed Unit

FLOTT Machine Tools

FLOTT Machine Safety

Available also with transparent protective hood: P30 / P35 / P40 STG PV electronic

Electrical Chuck Guard

All FLOTT drilling machines are by **standard equipped with an electrical chuck guard** that shuts the machine down while the chuck guard is opened. This is a further FLOTT contribution towards machine safety.

Drill guard with micro switch but with split guard

On request we can supply a drill guard with micro switch and split shield for all machines

Please check the FLOTT website www.flott.de for additional information, our latest products releases and improvements.

Table drilling machine in single phase execution TB 10 Eco ▶Plus

Fig.: TB P10 EcoPlus
with special accessories

FLOTT Machine Tools

By standard

- Robust, high-quality and slanted rotary molded hood for easy read out of the machine speed
- Integrated high power LED light with focus
- Quick adjustable and ergonomically designed drill depth stop
- Inf. var. speed adjustment
- Cable with grounded plug 1.2 m
- No volt release
- Electrical drill guard
- Thermal overload protection
- Emergency Switch-off button

Optional/Accessories

- Drill head height adjustment with Spindle support
  Order No. 290.302
- Machine base with door and mounting plate 800 mm
  Order No. 213.168
- Machine vice with prisms
  clamping jaw width: 85 mm
  clamping range: 75 mm
  clamping jaw height: 30 mm
  Order No. 281.205
- Spiral drill set HSSg
  DIN 338 25 parts
  1-13 x 0.5 mm incr.
  crosswise grounded drill tip 135°
  Order No. 285.124
- keyless drill chuck (1-13 mm), B16, Concentricity: 0.30 mm
  Order No. 285.131
- Precision drill chuck, ground and self-locking for left/right turn till 8,000 rpm
  chucking range: 1-13 mm
  holding fixture is B16
  run-out accuracy: 0.06mm
  Order-no. 285.064

Technical Data

Spindle	B 16
Speed indication	digital
Drill depth indication	Scale
Drill depth end stop	quickly adjustable end stop ring
Feed	Manual feed

TB 10 Eco Plus

Drilling capacity steel	12 mm
Aluminium	20 mm
Soft wood	40 mm
Drilling depth	50 mm
Distance column-spindle	180 mm
Machine-column diameter	50 mm
Usable working surface (L x W)	300 x 200 mm
T-slot size	quantity 2, distance 100 mm size width 12/20 mm
Machine size (W x D x H) Machine size (incl. packaging) (W x D x H)	400 x 248 x 460 mm 430 x 680 x 810 mm
Drill head height adjustment	manual
Weight	30 kg
Distance spindle-table	105-245 mm
Motor Single phase AC 230 V	0.45 kW
Speed range, inf. var.	250-3,000 1/min
Order No.	**217.200**

ADDITIONAL OPTIONS FROM PAGE 61

Table drilling machine Turbo Drill TB 10 ▶Plus

Fig.: TB 10 ▶Plus

By standard

- Digitally controlled threading
- Tapping capacity TURBO DRILL max. M5/
  Tapping capacity TB 10 plus max. M6
- Precise adjustment of the thread cutting depth by digitally controlled depth indicator
- Integrated high power LED light with focus
- Emergency-OFF punch button
- Electrical drill guard
- Programmable Spindle Stop Function
- No voltage release
- Thermal overload protection
- Cable 1,2 m with plug

Accessories

- Machine cabinet with board made from multiplex wood and integrated metal drawer
  Height: 840 mm / Weight: 28 kg
  Order No. 250.208
- Standard keyed chuck for TURBO DRILL, B12
  Clamping range 0.5-8 mm
  Rotational accuracy: 0.20 mm
  Order No. 285.103
- High precision keyless chuck for TURBO DRILL, B 12
  Clamping range 0.5-6 mm
  Rotational accuracy: 0.05 mm
  Order No. 285.104
- Standard keyless chuck for TB 10 plus; B 16
  Clamping range 1-13 mm
  Rotational accuracy: 0.30 mm
  Order No. 285.131
- Precision drill chuck, ground and self-locking for left/right turn till 8,000 rpm
  chucking range: 1-13 mm
  holding fixture is B16
  run-out accuracy: 0.06mm
  Order-no. 285.064
- Tapping Chuck with Range M4-M12 according to DIN 371
  Order No. 285.109
- Worktable with T-Slots incl. height adjustment by geared rack (instead of height adjustment of the machine head)
  Usable worktable surface (W x L): 300 x 250 mm
  Order No. 290.521
- Drill depth fixed endstop
  Order No. 212.716

FLOTT Machine Tools

Technical Data

Spindle	Turbodrill B 12/ TB 10 Plus B 16
Drill depth	60 mm
Distance column-spindle	220 mm
Column diameter	70 mm
Usable worktable surface (W x L)	300 x 250 mm
Dimensions of machine (W x D x H)	320 x 520 x 820 mm
Dimensions of machine (incl. packaging W x D x H)	452 x 700 x 1,130 mm
Distance spindle – working surface	140-315 mm
Height Adjustment	manual
T-Slots size: 2 Cross Slots, Dimensions Width	14/ 26 mm
Speed Indication	digital (rpm)
Indication of Depth	digital (mm/inch)
Depth gauge	stop ring (pos. locking)
Feed	manual
Three phase motor AC 230 V (frequency converted)	0.54 kW
Weight	44 kg

Turbo Drill*

Drilling performance (continuous/standard)	6/ 8 mm
Threading performance	max. M5
Speed (continuously variable/ digitally controlled)	100-10,000 1/min
Order No.	**212.506**

TB 10 Plus*

Drilling performance (continuous/standard)	10/12 mm
Threading performance	max. M6
Speed (continuously variable/ digitally controlled)	60-6,000 1/min
Order No.	**212.505**

ADDITIONAL OPTIONS FROM PAGE 61

Control Panel with Display

- Clearly laid out operating panel with a central metal rotary knob
- OLED-Display (organic light emitting diode) for best resolution, clearly visible from almost any angle
- Mode selection between drilling and tapping
- Precise display of depth (actual-target) and speed (rpm)
- Counting function of work cycles
- Energy saving mode with memory function of the settings
- Easy to maintain

*This drill press does meet all requirements according the norm DIN EN 55011:2011-04 [Classification A]. In case of a malfunction, please contact the manufacturer.

Table and Column Drilling Machine

TB 13 ▶Plus
TBZ 13 ▶Plus
SB 13 ▶Plus

Fig.: TBZ 13 ▶Plus

Fig.: TB 13 ▶Plus with options

Fig.: TB 13 ▶Plus with MK II to go!

By standard

- Digitally controlled threading
- Tapping capacity max. M8
- Precise adjustment of the thread cutting depth by digitally controlled depth indicator
- Programmable Spindle Stop Function
- Integrated high power LED light with focus
- Emergency-OFF punch button
- Electrical drill guard
- No voltage release
- Thermal overload protection
- Cable 1,2 m with plug

Accessories

- Machine cabinet with board made from multiplex wood and integrated metal drawer
  Height: 840 mm / Weight: 28 kg
  Order No. 250.208
- Standard keyless chuck, B 16
  Clamping range 1-13 mm
  Rotational accuracy: 0.30 mm
  Order No. 285.131
- Precision drill chuck, ground and self-locking for left/right turn till 8,000 rpm
  chucking range: 1-13 mm
  holding fixture is B16
  run-out accuracy: 0.06mm
  Order-no. 285.064
- Tapping Chuck with Range M4-M12 according to DIN 371
  Order No. 285.109

- Machine vice with prisms
  clamping jaw width: 100 mm
  clamping range: 95 mm
  clamping jaw height: 30 mm
  Order No. 281.206
- Drill depth fixed end stop
  Order No. 212.716
- Machine base height 800 mm,
  Weight: 36 kg
  Order No. 201.160 (for TBZ type) **212.860** (for TB type)
- Arbour (for 13 Plus MK II) MK II B16
  Order No. 285.320

Control Panel with Display

- Clearly laid out operating panel with a central metal rotary knob
- OLED-Display (organic light emitting diode) for best resolution, clearly visible from almost any angle
- Mode selection between drilling and tapping
- Precise display of depth (actual-target) and speed (rpm)
- Counting function of work cycles
- Energy saving mode with memory function of the settings
- Easy to maintain

FLOTT Machine Tools

Technical Data

Spindle	B 16, optional MK II
Drill depth	60 mm
Threading performance	max. M8
Speed Indication	digital
Indication of Depth	digital (mm/inch)
Depth gauge	stop ring (pos. locking)
Feed	manual
Table height adjustment (TB/SB)	with rack
Drill head height adjustment (TBZ)	with rack
Three phase motor AC 230 V (frequency converted)	0.54 kW

TB 13 Plus*

Drilling performance (continuous/standard)	13/15 mm
Distance column-spindle	220 mm
Column diameter	70 mm
Usable worktable surface (W x L)	300 x 250 mm
Distance spindle-work table,	
spindlenose-work table	85-370 mm
spindlenose-work table(down)	420 mm
T-slots size (arm)	2; distance 125 mm width dimension 14/26 mm
T-slots size (machine base)	2 cross slots width dimension 14/26 mm
Speed (continuously variable/digitally controlled)	40-4,000 1/min
Dimensions of machine (W x D x H)	400 x 520 x 850 mm
Dimensions of machine (incl. packaging W x D x H)	420 x 700 x 1,130 mm
Weight	62 kg
Order No. (B 16) 212.500	**Order No. (MK II) 212.503**

TBZ 13 Plus*

Spindlenose-work table	125-490 mm
Usable worktable surface (W x L)	340 x 280 mm
Distance column-spindle	214 mm
Column diameter	82 mm
Machine size with base (W x D x H)	350 x 495 x 1,800 mm
Machine size with base (incl. packaging) (W x D x H)	940 x 570 x 2,140 mm
Machine size without base (W x D x H)	320 x 485 x 1,027 mm
Machine size without base (incl. packaging) (W x D x H)	940 x 570 x 1,600 mm
Weight without base	70 kg
Order No. (B 16) 212.650	**Order No. (MK II) 212.655**

SB 13 Plus*

Drilling performance (continuous/standard)	13/15 mm
Distance column-spindle	220 mm
Column diameter	70 mm
Usable worktable surface (W x L)	300 x 250 mm
Distance spindle – working surface	750 mm (max.)
Eccentricity	20 mm
T-slots	2; distance 125 mm width dimension 13/ 26 mm
Speed (continuously variable/digitally controlled)	40-4,000 1/min
Dimensions of machine (W x D x H)	420 x 540 x 1,780 mm
Dimensions of machine (incl. packaging W x D x H)	572 x 936 x 2,142 mm
Weight	85 kg
Order No. (B 16) 212.502	**Order No. (MK II) 212.504**

ADDITIONAL OPTIONS FROM PAGE 61

*This drill press does meet all requirements according the norm DIN EN 55011:2011-04 [Classification A]. In case of a malfunction, please contact the manufacturer.

Table and Column Drilling Machine

TB 15 ▶Plus
TBZ 15 ▶Plus
SB 15 ▶Plus

Fig.:: TB 15 ▶Plus

By standard

- Digitally controlled threading
- Tapping capacity max. M10
- Precise adjustment of the thread cutting depth by digitally controlled depth indicator
- Programmable Spindle Stop Function
- Table height adjustment with rack (only SB and TB 15 Plus) – Adjustment Head TBZ 15 Plus
- Integrated high power LED light with focus
- Emergency-OFF punch button
- Electrical drill guard
- No voltage release
- Thermal overload protection
- Cable 1,2 m with plug

Accessories

- Machine cabinet with board made from multiplex wood and integrated metal drawer
  Height: 840 mm / Weight: 28 kg
  Order No. 250.208
- Standard keyless chuck, B 16
  Clamping range 1-13 mm
  Rotational accuracy: 0.30 mm
  Order No. 285.131
- Precision drill chuck, ground and self-locking for left/right turn till 8,000 rpm
  chucking range: 1-13 mm
  holding fixture is B16
  run-out accuracy: 0.06mm
  Order-no. 285.064
- Tapping Chuck with Range M4-M12 according to DIN 371
  Order No. 285.109

- Machine vice with prisms
  clamping jaw width: 100 mm
  clamping range: 95 mm
  clamping jaw height: 30 mm
  Order No. 281.206
- Drill depth fixed end stop
  Order No. 212.716
- Machine base height 800 mm,
  Weight: 36 kg
  Order No. 201.160 (for TBZ type) **212.860** (for TB type)
- Arbour (for 13 Plus MK II) MK II B16
  Order No. 285.320

Control Panel with Display

- Clearly laid out operating panel with a central metal rotary knob
- OLED-Display (organic light emitting diode) for best resolution, clearly visible from almost any angle
- Mode selection between drilling and tapping
- Precise display of depth (actual-target) and speed (rpm)
- Counting function of work cycles
- Energy saving mode with memory function of the settings
- Easy to maintain

FLOTT Machine Tools

Technical Data

Spindle	MK II
Drill depth	60 mm
Threading performance	max. M10
Speed Indication	digital
Indication of Depth	digital (mm/inch)
Depth gauge	stop ring (pos. locking)
Feed	manual
Table height adjustment (TB/SB)	with rack
Drill head height adjustment (TBZ)	with rack
Three phase motor AC 230 V (frequency converted)	0.75 kW

TB 15 Plus*

Drilling performance (continuous/standard)	15/18 mm
Distance column-spindle	220 mm
Column diameter	70 mm
Usable worktable surface (W x L)	300 x 250 mm
Distance spindle-work table,	
spindlenose-work table	85-370 mm
spindlenose-work table(down)	420 mm
T-slots size (arm)	2; distance 125 mm width dimension 14/26 mm
T-slots size (machine base)	2 cross slots width dimension 14/26 mm
Speed (continuously variable/ digitally controlled)	40-4,000 1/min
Dimensions of machine (W x D x H)	400 x 520 x 850 mm
Dimensions of machine (incl. packaging W x D x H)	420 x 700 x 1,130 mm
Weight	65 kg
Order No.	**212.755**

TBZ 15 Plus*

Spindlenose-work table	125-490 mm
Usable worktable surface (W x L)	340x280 mm
Distance column-spindle	214 mm
Column diameter	82 mm
Machine size with base (W x D x H)	350 x 495 x 1,800 mm
Machine size with base (incl. packaging) (W x D x H)	940 x 570 x 2,140 mm
Machine size without base (W x D x H)	320 x 485 x 1,027 mm
Machine size without base (incl. packaging) (W x D x H)	940 x 570 x 1,600 mm
Weight without base	73 kg
Order No.	**212.765**

SB 15 Plus*

Drilling performance (continuous/standard)	15/18 mm
Distance column-spindle	220 mm
Column diameter	70 mm
Usable worktable surface (W x L)	300 x 250 mm
Distance spindle – working surface	750 mm (max.)
Eccentricity	20 mm
T-slots	2; distance 125 mm width dimension 14/ 26 mm
Speed (continuously variable/ digitally controlled)	40-4,000 1/min
Dimensions of machine (W x D x H)	420 x 540 x 1,780 mm
Dimensions of machine (incl. packaging W x D x H)	572 x 936 x 2,142 mm
Weight	88 kg
Order No.	**212.750**

ADDITIONAL OPTIONS FROM PAGE 61

*This drill press does meet all requirements according the norm DIN EN 55011:2011-04 [Classification A]. In case of a malfunction, please contact the manufacturer.

Drilling production line BS 15 ▶Plus

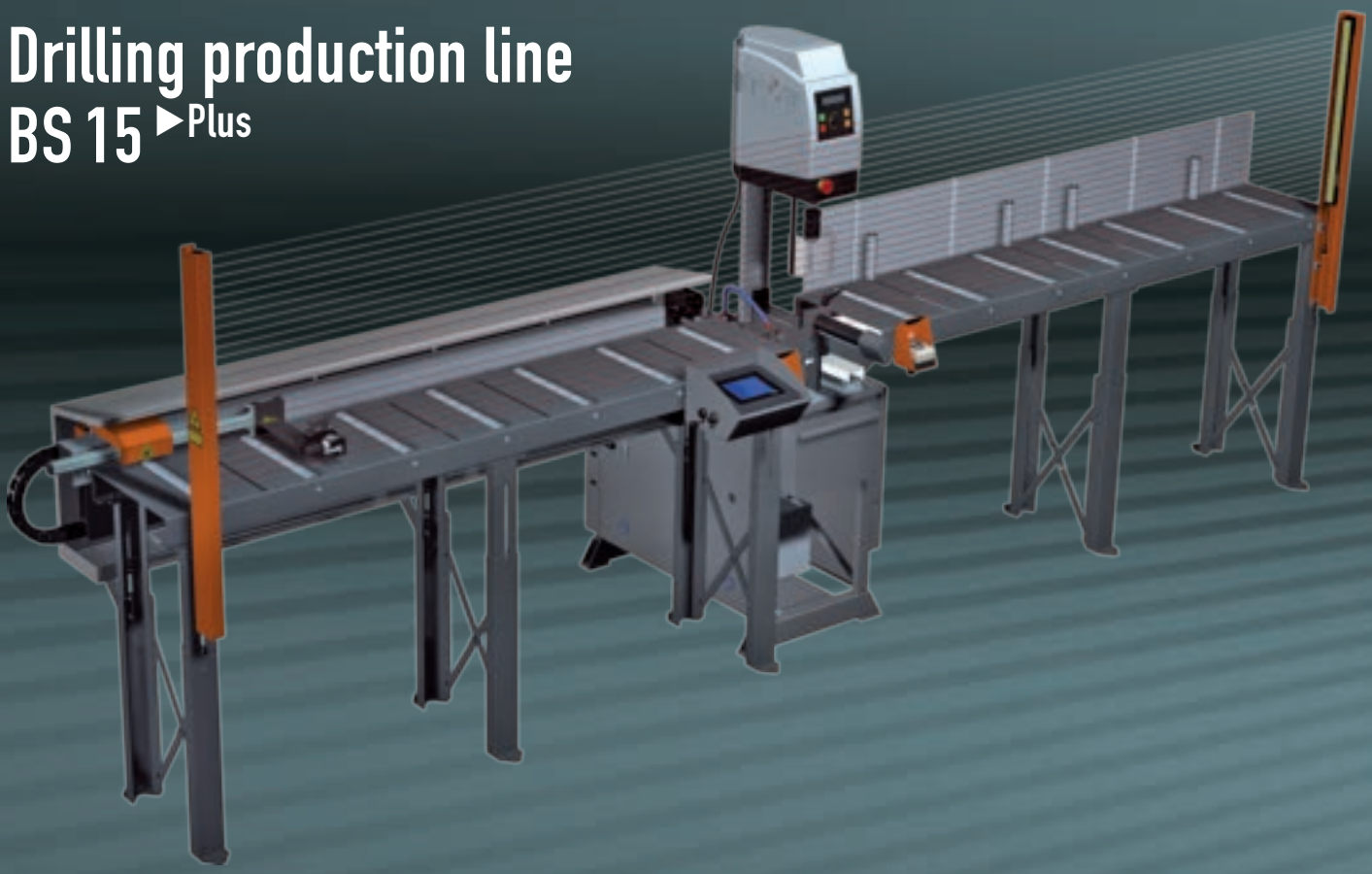

Fig.: Bohrstraße BS 15 ▶Plus with options

FLOTT Machine Tools

By standard

- Reliable control unit for industrial use
- Control panel with 5.7 "display
- Positioning by use of frequency converter or servo inverter
- Program storage on internal Memory or USB stick
- 2 button operation of in-feed cycles
- Feeding system (X-axis) with prehensile claw; Length: 4,500 mm
- Main chuck (pneumatic) located under the drilling unit TBZ 15 Plus
- Incl. Safety light barrier system (CE conformity))

Optional/Accessories

Drilling production line with 1 NC-Axis

- X-axis travel and feeding system (Material) NC controlled
- Y-axis: manual adjustment with hand wheel
- Z-Axis: drilling, thread-cutting and flowforming by hand

Drilling production line 15 Plus with 2 NC-Axes

- XY- axis travel and feeding system (Material) NC-controlled
- Z-Axis: drilling, thread-cutting and flowforming by hand

All FLOTT Drilling Production Lines can be fully customized to meet your specific requirements! We would be happy to assist you!

Technical Data

Feeding roller conveyor (l x w)	5,000 x 330 mm
Unloading roller conveyor (l x w)	5,000 x 330 mm
Travel speed X-axis:	12 m / min
Positioning accuracy X axis	+/- 0.2 mm
Repetitive accuracy X-axis	+/- 0.1 mm
Order No.: 1 NC-Axis	**288.020**
Order No.: 2 NC-Axes	**288.021**

In combination with TBZ 15 Plus*

Drilling performance (continuous/standard)	15/18 mm
Spindle	MK II
Drill depth	60 mm
Threading performance	max. M10
Column diameter	82 mm
3 Phase AC motor-frequency controlled, Power Supply 230 V	0,75 kW
max. torque	15 Nm

*This drill press does meet all requirements according the norm DIN EN 55011:2011-04 [Classification A]. In case of a malfunction, please contact the manufacturer.

Table and Column Drilling Machine

TB 18 ▶Plus
TBZ 18 ▶Plus
SB 18 ▶Plus

Fig.: TBZ 18 ▶Plus

Fig.: SB 18 ▶Plus with options
Images may vary

Fig.: TB 18 ▶Plus with options

By standard

- Inf. var. speed adjustment
- Quickly adjustable end stop ring
- Tapping unit
- Table height adjustment with rack (only SB and TB 18 Plus) – Adjustment Head TBZ 18 Plus
- Emergency-OFF punch button
- No volt release
- Cable 1.2 m
- Table height adjustment with rack
- Electrical drill guard
- Thermal overload protection
- Machined base plate with T Slots (only for TB)
- LED-light integrated in drill head

Optional/Accessories

- Machine cabinet with board made from multiplex wood and integrated metal drawer (Only for TB and TBZ)
  Height: 840 mm / Weight: 28 kg
  Order No. 250.208
- Machined base plate incl integrated cooling Unit (SB type only), contents max 15 l,
  Flow rate max 30 l/min
  Order No. 290.160A

- LED light with hinged arm
  Order No. 290.020
- Machine base height 800 mm (for TB/TBZ type), Weight: 36 kg
  Order No. 201.160

- Cooling unit with separate tank (SB type only) contents max 15 l
  Flow rate max. 30 l/min
  Order No. 290.340
- Arbour MKII/B18
  Order No. 285.321
- Keyless drill chuck
  tool holder: B18
  clamping range: 3-16 mm
  concentricity: 0.30 mm
  Order No. 285.161
- Machine vice with prisms
  clamping jaw width: 120 mm
  clamping range: 105 mm
  clamping jaw height: 30 mm
  Order No. 281.207
- Spiral Drill Set according to DIN 338 HSSG 25 pcs.,
  crosswise precision grounded 135°,
  Ø 1.0 – 13.0 x 0.5 mm
  Order No. 285.124

FLOTT Machine Tools

Technical Data

Drilling capacity	18/20 mm
Tapping capacity (depending on size)	max. M12
Spindle	MKII
Drilling depth	100 mm
Distance column-spindle	240 mm
Machine-column diameter	Ø 82 mm
Usable work table surface (L x W)	340 x 280 mm
T-slot size	quantity 2, distance 125 mm size width 13/26 mm
Speed indication	digital
Drill depth indication	digital
Drill depth end stop	Quickly adjustable end stop ring
Feed	manual
Table height adjustment (SB/TB)	With rack
Drill head height adjustment (TBZ)	With rack
Three phase motor AC 230 V (frequency converted)	kW 0.75
Speed range inf. var.	30-3,000 1/min

TB 18 Plus*

Distance spindle - working surface	
spindlenose-work table	155-415 mm
spindlenose- machine base	155-550 mm
Machine size (W x D x H)	355 x 705 x 1,065 mm
Machine size (incl. packaging) (W x D x H)	560 x 940 x 1,612 mm
Weight	121 kg
Order No.	**218.303**

TBZ 18 Plus*

Distance spindle – working surface	155-550 mm
Machine size with base (W x D x H)	355 x 705 x 1,845 mm
Machine size with base (incl. packaging) (W x D x H)	572 x 940 x 2,140 mm
Machine size without base (W x D x H)	355 x 705 x 1,045 mm
Machine size without base (incl. packaging) (W x D x H)	540 x 940 x 1,600 mm
Weight without base	106 kg
Order No. without base	**218.309**

SB 18 Plus*

Distance spindle table	160-880 mm
Machine size (W x D x H)	355 x 705 x 1,825 mm
Machine size (incl. packaging) (W x D x H)	572 x 936 x 2,142 mm
Weight	151 kg
Order No.	**218.308**

ADDITIONAL OPTIONS FROM PAGE 61

*This drill press does meet all requirements according the norm DIN EN 55011:2011-04 [Classification A]. In case of a malfunction, please contact the manufacturer.

Table and Column Drilling Machine

TB 23 ▶Plus
TBZ 23 ▶Plus
SB 23 ▶Plus

Fig.: TB 23 ▶Plus with options

Fig.: TBZ 23 ▶Plus

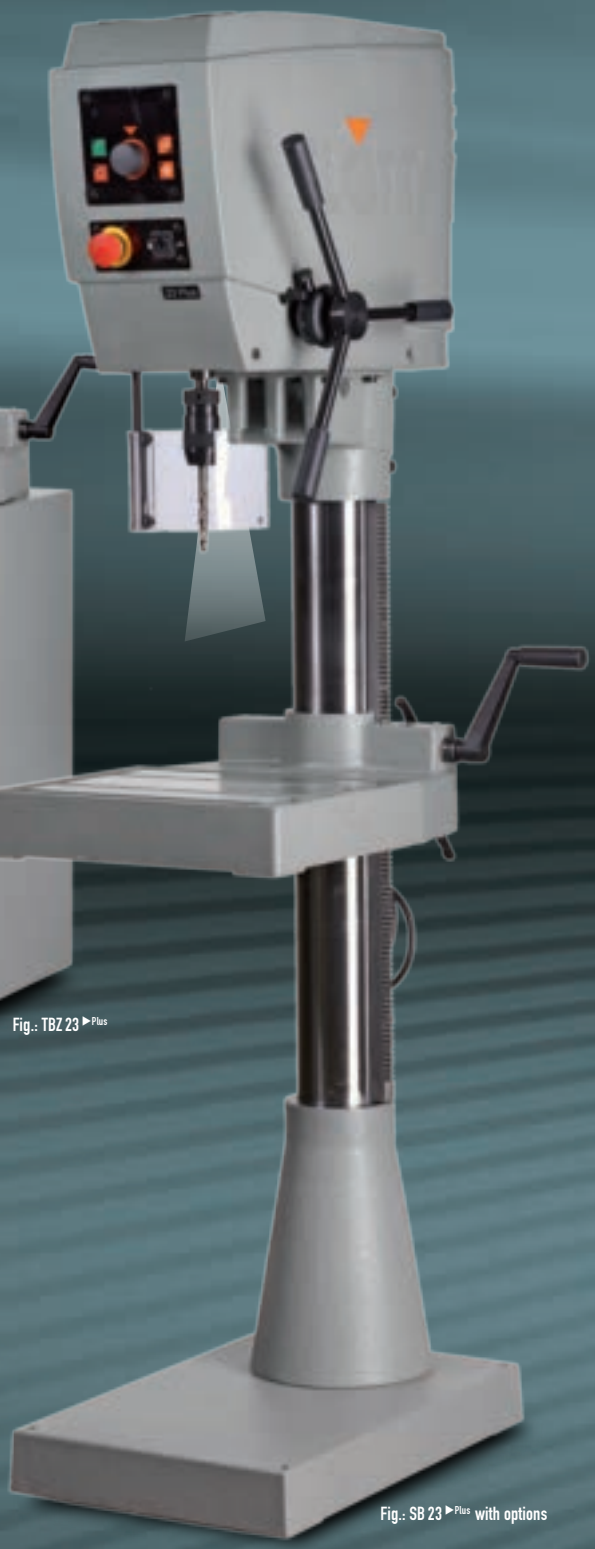

Fig.: SB 23 ▶Plus with options

By standard

- Inf. var. speed adjustment
- Quickly adjustable end stop ring
- Tapping unit
- Table height adjustment with rack (only SB and TB 23 Plus)
  – Adjustment Head TBZ 23 Plus
- Emergency-OFF punch button
- No volt release
- Cable 1.5 m with CEE plug
- Table height adjustment with rack
- Electrical drill guard
- Thermal overload protection
- Machined base plate with T Slots (only for TB)
- LED-light integrated in drill head

Optional/Accessories

- Machined base plate incl
  integrated cooling Unit (SB only),
  contents max 15 l,
  Flow rate max 30 l/min
  Order No. 290.160A
- LED light with hinged arm
  Order No. 290.020

- Machine base height 800 mm
  (for TB/TBZ type), Weight: 46 kg
  Order No. 205.160
- Cooling unit (separate tank)
  contents max 15 l
  Flow rate max. 30 l/min
  Order No. 290.340
- Arbour MKII/B18
  Order No. 285.321
- Keyless drill chuck
  tool holder: B18
  clamping range: 3-16 mm
  concentricity: 0.30 mm
  Order No. 285.161
- Machine vice with prisms
  clamping jaw width: 120 mm
  clamping range: 105 mm
  clamping jaw height: 30 mm
  Order No. 281.207
- Spiral Drill Set according
  to DIN 338 HSSG 25 pcs.,
  crosswise precision grounded 135°,
  Ø 1.0 – 13.0 x 0.5 mm
  Order No. 285.124

FLOTT Machine Tools

Technical Data

Drilling capacity	23/25 mm
Tapping capacity (depending on size)	max. M16
Spindle	MKII
Drilling depth	100 mm
Distance column-spindle	260 mm
Machine-column diameter	Ø 110mm
Usable work table surface (L x W)	420 x 340 mm
T-slot size	quantity 2, distance 125 mm size width 13/26 mm
Speed indication	digital
Drill depth indication	digital
Drill depth end stop	Quickly adjustable end stop ring
Feed	manual
Table height adjustment (SB/TB)	With rack
Drill head height adjustment (TBZ)	With rack
Three phase motor AC 3x400 V (frequency converted)	kW 1.5
Speed range inf. var.	20-2,000 1/min

TB 23 Plus*

Distance spindle - working surface	
spindlenose-work table	230-590 mm
spindlenose-machine base	230-670 mm
Machine size (W x D x H)	550 x 750 x 1,250 mm
Machine size (incl. packaging) (W x D x H)	570 x 940 x 1,600 mm
Weight	240 kg
Order No.	**223.021**

TBZ 23 Plus*

Distance spindle – working surface	230-730 mm
Machine size with base (W x D x H)	550 x 750 x 2,050 mm
Machine size with base (incl. packaging) (W x D x H)	637 x 1,096 x 2,120 mm
Machine size without base (W x D x H)	550 x 750 x 1,250 mm
Machine size without base (incl. packaging) (W x D x H)	570 x 940 x 1,600 mm
Weight without base	240 kg
Order No. without base	**223.022**

SB 23 Plus*

Distance spindle table	230 x 850 mm
Machine size (W x D x H)	550 x 750 x 1,800 mm
Machine size (incl. packaging) (W x D x H)	637 x 1,069 x 2,120 mm
Weight	275 kg
Order No.	**223.020**

ADDITIONAL OPTIONS FROM PAGE 61

*This drill press does meet all requirements according the norm DIN EN 55011:2011-04 [Classification A]. In case of a malfunction, please contact the manufacturer.

Column Drilling Machine SB E3

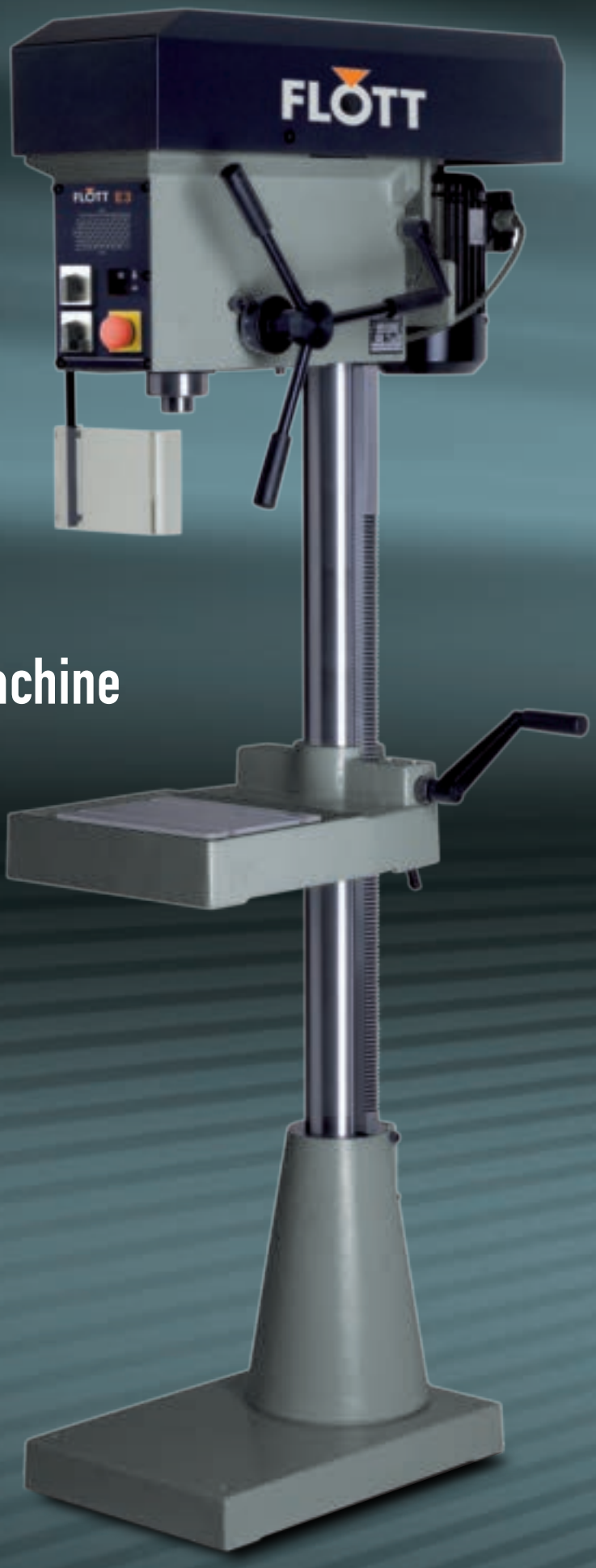

Fig.: SB/E3
with options

FLOTT Machine Tools

By standard

- Emergency switch-off punch button
- No volt release
- Cable 1.5 m mit CEE plug
- Quickly adjustable end stop ring
- Three phase motor
- Table height adjustment with rack
- Electrical drill guard
- Thermal overload protection

Optional/ Accessories

- Manual reverse switch
  (max M10, depending on pitch)
  Order No. 290.403
- Cooling unit, contents max 15 l
  flow rate max 30 l/min
  Order No. 290.340
- Arbour MKIII/B18
  Order No. 285.323
- Keyless drill chuck
  tool holder: B18
  clamping range: 3-16 mm
  concentricity: 0.30 mm
  Order No. 285.161
- Machine vice with prisms
  clamping jaw width: 120 mm
  clamping range: 105 mm
  clamping jaw height: 30 mm
  Order No. 281.207
- Spiral Drill Set according
  to DIN 338 HSSG 25 pcs.,
  crosswise precision grounded 135°,
  Ø 1.0 – 13.0 x 0.5 mm
  Order No. 285.124
- LED-light integrated in drill head
  45°, LUMEN:150 cold white
  Order No. 290.070

Technical Data

Drilling capacity	20/25 mm
Spindle	MKIII
Drilling depth	90 mm
Distance column-spindle	240 mm
Machine-column diameter	Ø 82 mm
Usable work table surface (L x W)	340 x 280 mm
T-slot size	quantity 2, distance 125 mm size width 13/26 mm
Speed indication	Scale
Drill depth indication	Scale
Drill depth end stop	Quickly adjustable end stop ring adjustment range 0-90 mm
Feed	manual
Table height adjustment	With rack
Motor 400 V 50 Hz	0.45/0.8 kW 2 speed motor
Spindle speed: 12 steps	250-315-500-630-800 1,000-1,250-1,600-2,000 2,500-3,600-4,000 1/min

SB E3

Distance spindle table	160-880 mm
Machine size (W x D x H) Machine size (incl. packaging) (W x D x H)	460 x 740 x 1,800 mm 572 x 936 x 2,142 mm
Weight	205 kg
Order No.	**206.022**

SPECIAL OPTIONS ON PAGE 60 | 12

ADDITIONAL OPTIONS FROM PAGE 61

Column Drilling Machine SB E4

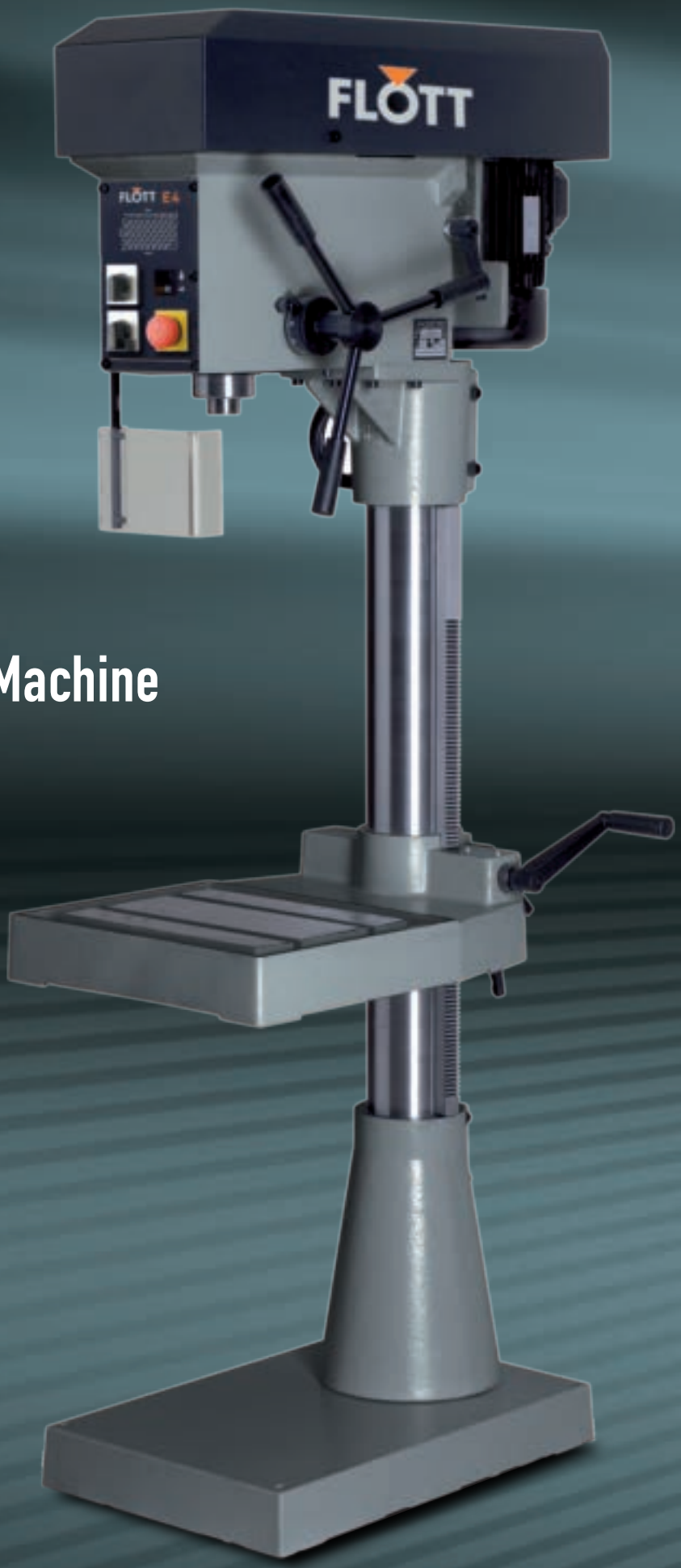

Fig.: SB/E4
with options

FLOTT Machine Tools

By standard

- Emergency switch-off punch button
- No volt release
- Cable 1.5 m mit CEE plug
- Quickly adjustable end stop ring
- Three phase motor
- Table height adjustment with rack
- Electrical drill guard
- Thermal overload protection

Optional/Accessories

- Manual reverse switch
  (max. M20, depending on pitch)
  Order No. 290.403
- Cooling unit, contents max 15 l
  flow rate max 30 l/min
  Order No. 290.340
- Arbour MKIII/B18
  Order No. 285.323
- Keyless drill chuck
  tool holder: B18
  clamping range: 3-16 mm
  concentricity: 0.30 mm
  Order No. 285.161
- Machine vice with prisms
  opening 120 mm,
  clamping width 105 mm
  Order No. 281.207
- Spiral Drill Set according
  to DIN 338 HSSG 25 pcs.,
  crosswise precision grounded 135°,
  Ø 1.0 – 13.0 x 0.5 mm
  Order No. 285.124
- LED-light integrated in drill head
  45°, LUMEN:150 cold white
  Order No. 290.070

Technical Data

Drilling capacity	25/30 mm
Spindle	MKIII
Drilling depth	125 mm
Distance column-spindle	280 mm
Machine-column diameter	Ø 110 mm
Usable work table surface (L x W)	420 x 340 mm
T-slot size	quantity 2, distance 125 mm size width 13/26 mm
Speed indication	Scale
Drill depth indication	Scale
Drill depth end stop	Quickly adjustable end stop ring adjustment range 0-90 mm
Feed	manual
Table height adjustment	With rack
Motor 400 V 50 Hz	0.9/1.3 kW 2-speed motor
Spindle speed with intermediate transmission 12 Steps	125-200-250-315-400-500-630 800-1,000-1,250-1,600-2,500 1/min

SB E4

Distance spindle table	270-820 mm
Machine size (W x D x H)	460 x 750 x 1,800 mm
Machine size (incl. packaging) (W x D x H)	367 x 1,096 x 2,120 mm
Weight	255 kg
Order No.	**206.060**

SPECIAL OPTIONS ON PAGE 60 | 12

ADDITIONAL OPTIONS FROM PAGE 61

Column Drilling Machine
SB M3 ST
SB M3 ST MV

Fig.: SB M3 ST MV

By standard

- Inf. var. speed adjustment
- Emergency switch-off punch button
- No volt release
- Table height adjustment with rack
- Drill depth end stop with fine adjustment
- Cable 1.5 m with CEE plug
- Electrical drill guard
- Thermal overload protection

Optional/ Accessories

- Combined drilling table/machine vice opening 120 mm, clamping width 105 mm table size 350 x 350 mm
  Order No. 290.135
- Drilling Cross-Piece with push button for feed-on/feed-off switch (only for ST MV)
  Order No. 290.120
- Machined base plate with T Slots
  Order No. 290.378

- Machined base plate with integrated cooling unit max. contents 15 l, max. flow rate 30 l/min
  Order No. 290.160B
- LED light with hinged arm
  Order No. 290.020
- Large machine base
  - Machine-column diameter Ø 125 mm
  - Usable work table surface (L x W) 590 x 450 mm
  Order No. 205.036 on request
- Cooling unit (separate tank) max. contents 15 l, max. flow rate 30 l/min
  Order No. 290.340
- Arbour MKIII/B18
  Order No. 285.323
- Keyless drill chuck tool holder: B18 clamping range: 3-16 mm concentricity: 0.30 mm
  Order No. 285.161
- Machine vice with prisms Opening 120 mm, clamping width 120 mm
  Order No. 281.210
- Spiral Drill Set according to DIN 338 HSSG 25 pcs., crosswise precision grounded 135°, Ø 1.0 – 13.0 x 0.5 mm
  Order No. 285.124
- LED-light integrated in drill head 45°, LUMEN:150 cold white
  Order No. 290.070

FLOTT Machine Tools

Technical Data

Drilling capacity	25/30 mm
Tapping capacity (depending on size)	max. M20
Spindle	MKIII
Drilling depth	125 mm
Distance column-spindle	280 mm
Machine-column diameter	Ø 110 mm
Usable work table surface (L x W)	420 x 340 mm
T-slot size	quantity 2, distance 125 mm size width 13/26 mm
Speed indication	Scale
Drill depth indication	Scale
Drill depth end stop	With fine adjustment
Table height adjustment	With rack
Motor 400 V 50 Hz	0.9/1.45 kW 2-speed motor
Spindle speed, inf. var. with intermediate transmission in 2 steps	125-4,000 1/min step I 125-2,000 1/min step II 250-4,000 1/min
(step change is realized via belt position change)	

SB M3 ST

Feed	manual
Machine size (W x D x H) Machine size (incl. packaging) (W x D x H)	520 x 820 x 1,900 mm 637 x 1,096 x 2,120 mm
Distance spindle table	240-790 mm
Weight	275 kg
Order No.	**205.180**

SPECIAL OPTIONS ON PAGE 60 | 1 | 2 | 3 | 4 | 5 | 6 | 10

SB M3 ST MV

Feed Incl. electromagnetic clutch	0.10 / 0.16 / 0.25 mm 1/min
Distance spindle table	240-790 mm
Machine size (W x D x H) Machine size (incl. packaging) (W x D x H)	520 x 820 x 1,900 mm 637 x 1,096 x 2,120 mm
Weight	300 kg
Order No.	**205.215**

SPECIAL OPTIONS ON PAGE 60 | 1 | 2 | 3 | 4 | 5 | 7 | 10

ADDITIONAL OPTIONS FROM PAGE 61

Column Drilling Machine
SB P30 ST
SB P30 STG PV electronic

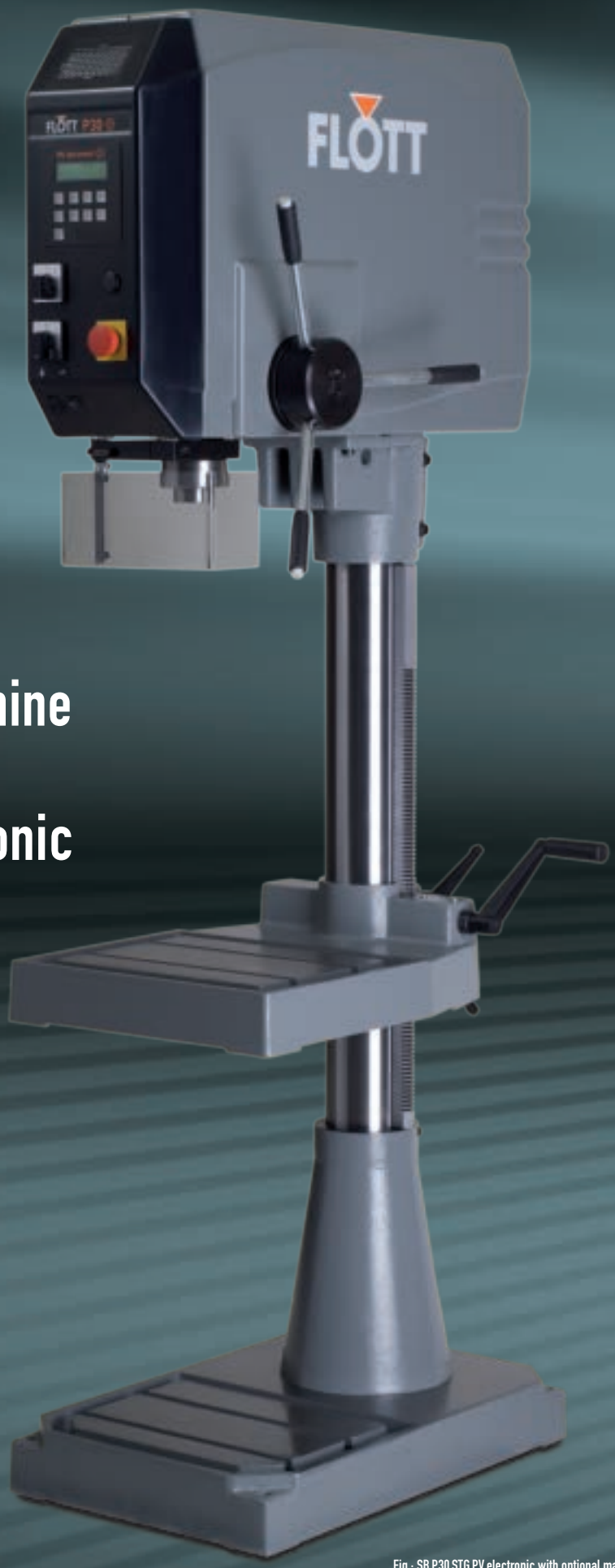

Fig.: SB P30 STG PV electronic with optional machined base plate

THE FLOTT TOP-SERIES!

FLOTT Machine Tools

By standard

- Depth end stop with fine adjustment
- Emergency switch-off punch button
- No volt release
- Inf. var. speed adjustment
- Table height adjustment with rack
- Cable 1.5 m with CEE plug
- Electrical drill guard
- Thermal overload protection

Series P30 ST

- Digital display for speed
- Digital display for drill depth
- Manual reverse switch

Series P30 STG PV electronic

- Digital display for speed
- Digital display for drill depth
- Digital display for feed speed
- Continuously electronically variable feed incl spindle control
- Automatic cut-off function on reaching programmed drilling depth
- Tapping unit, tapping capacity max M20
- Tapping depth adjustment using digital display
- Easily programmable drill depth end stop
- Star wheel with buttons for feed on/off function
- Optionally transparent top cover without surcharge
- LED light by standard (Order No. 290.070)

Optional/Accessories

- Tapping unit (P30 ST only) max. M20, tapping depth adjustment via digital display
  Order No. 290.622

- Motor with separate fan
  Order No. 290.617
- Combined drilling table/machine vice opening 120 mm, clamping width 105 mm table size 350 x 350 mm
  Order No. 290.125
- Machined base plate
  Order No. 290.378
- Machined base plate with integrated cooling unit max. contents 15 l, max. flow rate 30 l/min
  Order No. 290.160B

- LED light with hinged arm
  Order No. 290.020
- Large machine base
  - Machine-column diameter Ø 125 mm
  - Usable work table surface (L x W) 590 x 450 mm
  Order No. 205.036
- LED-light integrated in drill head 45°, LUMEN:150 cold white (P30 ST only)
  Order No. 290.070
- Cooling unit (separate tank) Contents max 15 l, flow rate max 30 l/min
  Order No. 290.340

Technical Data

Drilling capacity	25/30 mm
Tapping capacity (depending on size)	max. M20
Spindle	MKIII
Drilling depth	125 mm
Distance column-spindle	280 mm
Machine-column diameter	Ø 110 mm
Usable work table surface (L x W)	420 x 340 mm
T-slot size	quantity 2, distance 125 mm size width 13/26 mm
Speed indication	digital
Drill depth indication	digital
Drilling depth end stop	With fine adjustment
Table height adjustment	With rack
Motor 400 V 50 Hz	0.9/1.45 kW 2-speed motor
Speed range with intermediate transmission inf. var. in 2 steps	125-4,000 1/min step I 125-2,000 1/min step II 250-4,000 1/min
(step change is realized via belt position change)	

SB P30 ST

Feed	manual
Distance spindle table	240-790 mm
Machine size (W x D x H) Machine size (incl. packaging) (W x D x H)	520 x 820 x 1,900 mm 637 x 1,096 x 2,120 mm
Weight	275 kg
Order No.	**205.181**

SPECIAL OPTIONS ON PAGE 60 | 1 | 2 | 3 | 4 | 5 | 6 | 10

SB P30 STG PV electronic

Feed, inf. var. with electromagnetic clutch and digital display	0–300 mm/min
Distance spindle table	240-790 mm
Machine size (W x D x H) Machine size (incl. packaging) (W x D x H)	520 x 820 x 1,900 mm 637 x 1,096 x 2,120 mm
Weight	300 kg
Order No. with transparent top cover	**205.220**
Order No. with grey top cover	**205.183**

SPECIAL OPTIONS ON PAGE 60 | 1 | 2 | 3 | 4 | 7 | 10

ADDITIONAL OPTIONS FROM PAGE 61

Available software options for PV electronic

- **Safety module –** Spindle stops automatically in upper position
  Order No. 290.613
- **Chip cutter module** to avoid long chips
  Order No. 290.612
- **Multi feed unit –** Four free selectable feed speeds per cycle
  Order No. 290.614

Column Drilling Machine SB E5

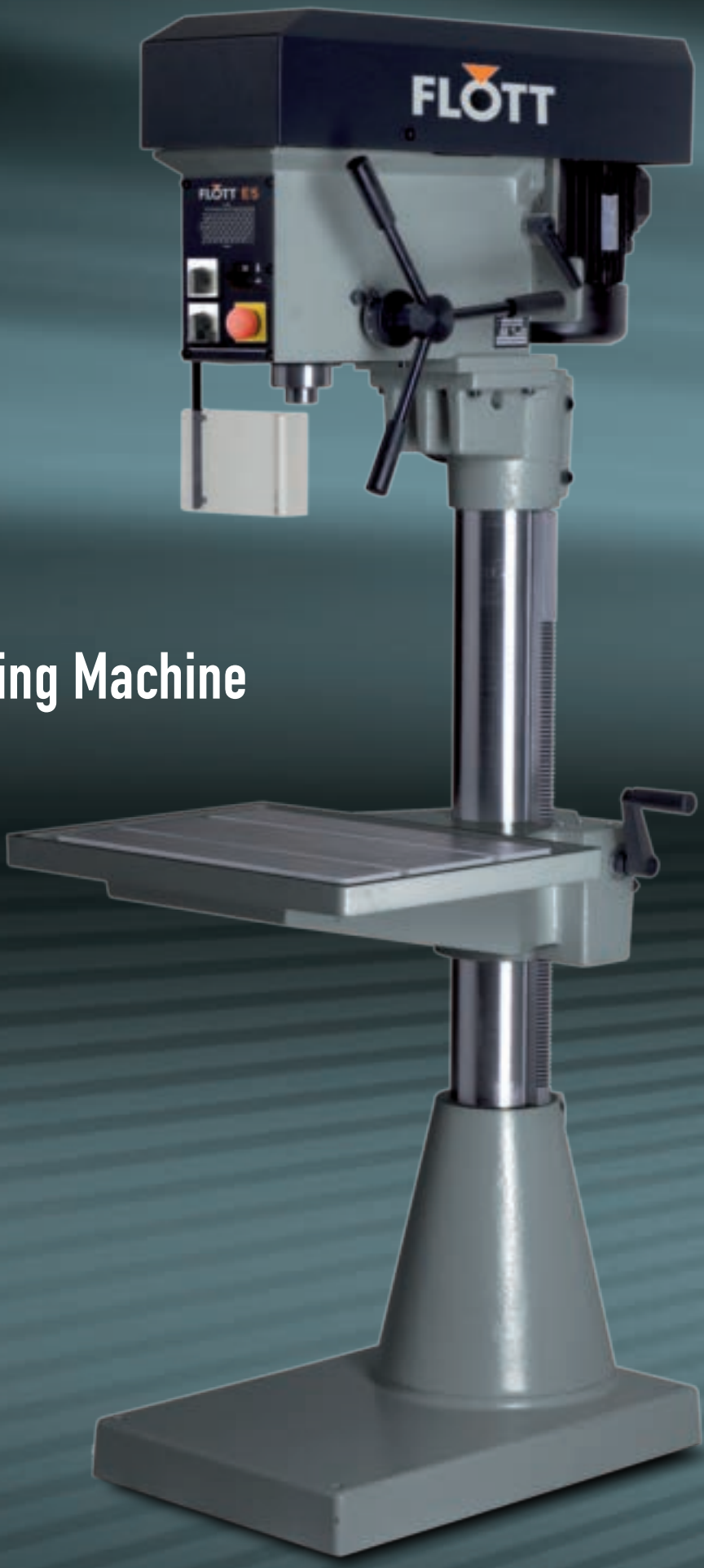

Fig.: SB/E5
with options

FLOTT Machine Tools

By standard

- Emergency switch-off punch button
- No volt release
- Cable 1.5 m mit CEE plug
- Quickly adjustable end stop ring
- Three phase motor
- Table height adjustment with rack
- Electrical drill guard
- Thermal overload protection

Optional/Accessories

- Manual reverse switch
  (max. M24, depending on pitch)
  Order No. 290.403
- Cooling unit, contents max. 15 l
  flow rate max 30 l/min
  Order No. 290.340
- Arbour MKIII/B18
  Order No. 285.323
- Keyless drill chuck
  tool holder: B18
  clamping range: 3-16 mm
  concentricity: 0.30 mm
  Order No. 285.161
- Machine vice with prisms
  opening 120 mm,
  clamping width 105 mm
  Order No. 281.207
- Spiral Drill Set according
  to DIN 338 HSSG 25 pcs.,
  crosswise precision grounded 135°,
  Ø 1.0 – 13.0 x 0.5 mm
  Order No. 285.124
- LED-light integrated in drill head
  45°, LUMEN:150 cold white
  Order No. 290.070

Technical Data

Drilling capacity	30/35 mm
Spindle	MKIII
Drilling depth	125 mm
Distance column-spindle	300 mm
Machine-column diameter	Ø 125 mm
Usable work table surface (L x W)	590 x 450 mm
T-slot size	quantity 2, distance 160 mm size width 14/26 mm
Speed indication	Scale
Drill depth indication	Scale
Drill depth end stop	Quickly adjustable end stop ring Adjustment range 0-90 mm
Feed	manual
Table height adjustment	With rack
Motor 400 V 50 Hz	0.9/1.45 kW 2-speed motor
Spindle speed with intermediate transmisson 12 steps	80-125-160-200-250-315-400 500-630-800-1,000-1,600 1/min

SB E5

Distance spindle table	270-820 mm
Machine size (W x D x H) Machine size (incl. packaging) (W x D x H)	460 x 740 x 1,800 mm 637 x 1,096 x 2,120 mm
Weight	350 kg
Order No.	**206.064**

SPECIAL OPTIONS ON PAGE 60 | 12
ADDITIONAL OPTIONS FROM PAGE 61

Column Drilling Machine
SB M4 ST
SB M4 ST MV

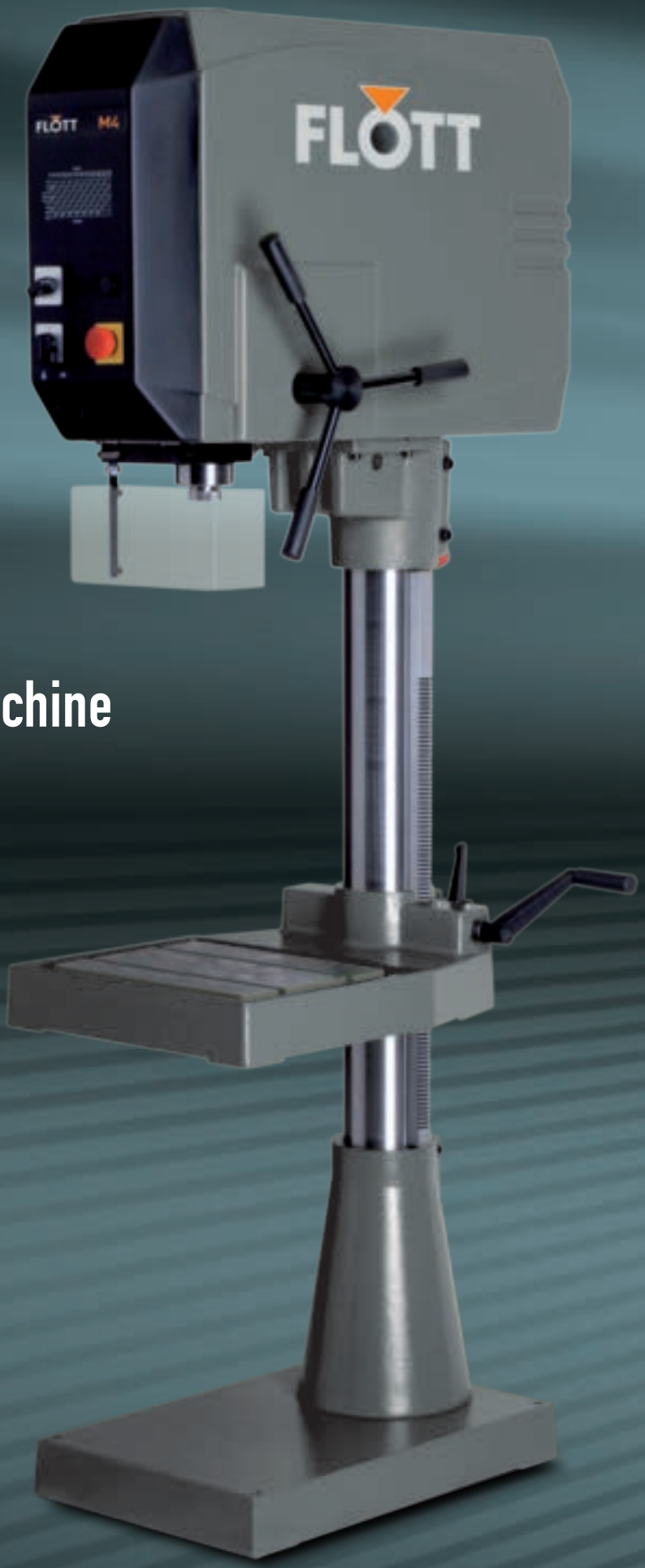

Fig.: SB M4 ST

By standard

- Inf. var. speed adjustment
- Manual reverse switch punch button
- Table height adjustment with rack
- Drill depth end stop with fine adjustment
- Emergency switch-off button
- No volt release
- Cable 1.5 m with CEE plug
- Electrical drill guard
- Thermal overload protection

Optional/Accessories

- Combined drilling table/ machine vice opening 120 mm, clamping width 105 mm table size 350 x 350 mm
  Order No. 290.125

- Drilling Cross-Piece with push button for feed-on/ feed-off switch
  Order No. 290.120
- Machined base plate with T Slots
  Order No. 290.378

- Machined base plate with integrated cooling unit max. contents 15 l, max flow rate 30 l/min
  Order No. 290.160B
- LED light with hinged arm
  Order No. 290.020
- Large machine base
  - Machine-column diameter Ø 125 mm
  - Usable work table surface (L x W) 590 x 450 mm
  Order No. 205.036
- Cooling unit (separate tank)
  Max. contents 15 l, max flow rate 30 l/min
  Order No. 290.340
- Arbour MKIII/B18
  Order No. 285.323
- Keyless drill chuck tool holder: B18 clamping range: 3-16 mm concentricity: 0.30 mm
  Order No. 285.161
- Machine vice with prisms Opening 120 mm, clamping width 120 mm
  Order No. 281.210
- Spiral Drill Set according to DIN 338 HSSG 25 pcs., crosswise precision grounded 135°, Ø 1.0 – 13.0 x 0.5 mm
  Order No. 285.124
- LED-light integrated in drill head 45°, LUMEN:150 cold white
  Order No. 290.070

FLOTT Machine Tools

Technical Data

Drilling capacity	30/35 mm
Tapping capacity (depending on size)	max. M24
Spindle	MKIII
Drilling depth	125 mm
Distance column-spindle	280 mm
Machine-column diameter	Ø 110 mm
Usable work table surface (L x W)	420 x 340 mm
T-slot size	quantity 2, distance 125 mm size width 13/26 mm
Speed indication	Scale
Drill depth indication	Scale
Drill depth end stop	With fine adjustment
Table height adjustment	With rack
Motor 400 V 50 Hz	1.5/2.0 kW 2-speed motor
Spindle speed, inf. var with intermediate transmission	125-2,000 1/min

SB M4 ST

Feed	manual
Distance spindle table	240-790 mm
Machine size (W x D x H) Machine size (incl. packaging) (W x D x H)	520 x 850 x 1,900 mm 637 x 1,096 x 2,120 mm
Weight	275 kg
Order No.	**205.192**

SPECIAL OPTIONS ON PAGE 60 | 1 | 2 | 3 | 4 | 5 | 6 | 10

SB M4 ST MV

Feed Incl. electromagnetic clutch	0.10 / 0.16 / 0.25 mm 1/min
Distance spindle table	240-790 mm
Machine size (W x D x H) Machine size (incl. packaging) (W x D x H)	520 x 850 x 1900 mm 637 x 1,096 x 2,120 mm
Weight	300 kg
Order No.	**205.195**

SPECIAL OPTIONS ON PAGE 60 | 1 | 2 | 3 | 4 | 5 | 7 | 10
ADDITIONAL OPTIONS FROM PAGE 61

Column Drilling Machine
SB P35 ST
SB P35 STG PV electronic

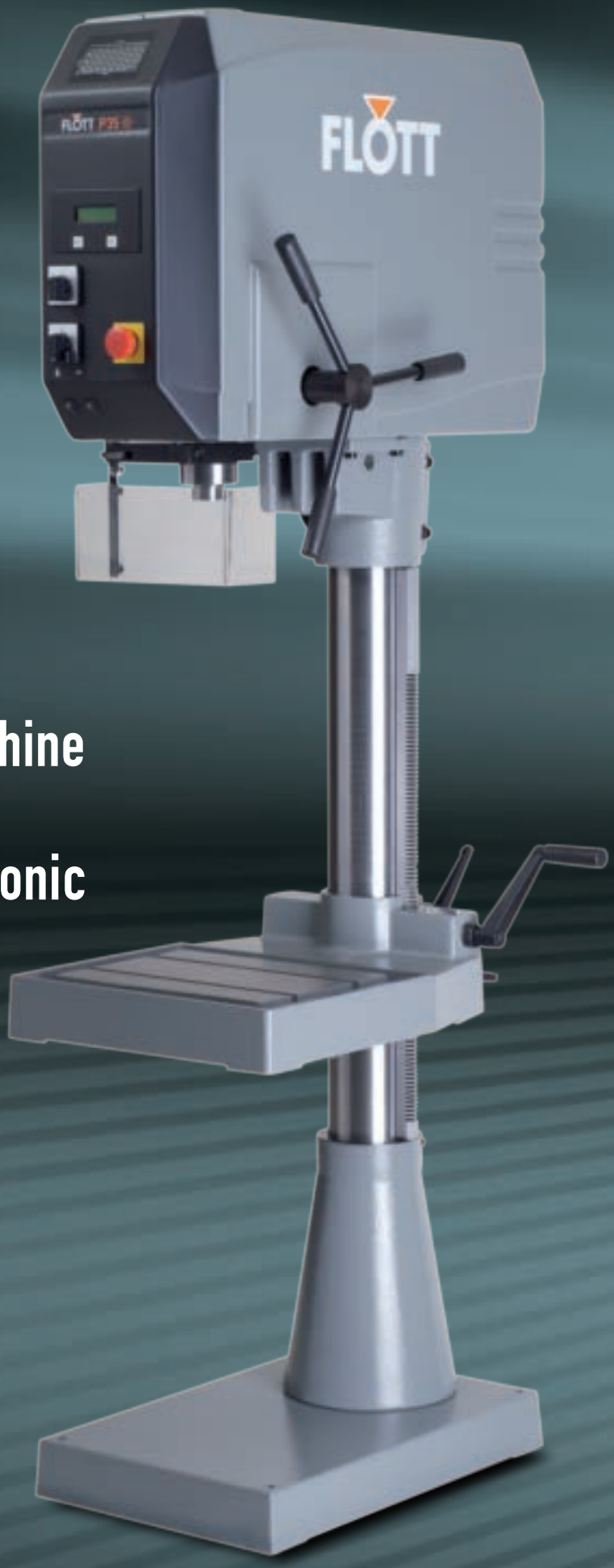

Fig.: SB P35 ST

By standard

- Depth end stop with fine adjustment
- Emergency switch-off punch button
- No volt release
- Inf. var. speed adjustment
- Table height adjustment with rack
- Cable 1.5 m with CEE plug
- Electrical drill guard
- Thermal overload protection

Series P 35 ST

- Digital display for speed
- Digital display for drilling depth
- Manual reverse switch

Series P 35 STG PV electronic

- Digital display for speed
- Digital display for drill depth
- Digital display for feed speed
- Continuously electronically variable feed incl spindle control
- Automatic cut-off function on reaching programmed drilling depth
- Tapping unit, tapping capacity max M24
- Tapping depth adjustment using digital display
- Easily programmable drill depth end stop
- Button for feed on/off function
- LED light by standard (Order No. 290.070)

Optional/Accessories

- Tapping unit (P35 ST only) max. M24, tapping depth adjustment via digital display
  Order No. 290.622
- Motor with separate fan
  Order No. 290.618
- Combined drilling table/machine vice opening 120 mm, clamping width 105 mm table size 350 x 350 mm
  Order No. 290.125

- Machined base plate (SB-version only)
  Order No. 290.378
- Machined base plate with integrated cooling unit, max. contents 15 l, max. flow rate 30 l/min
  Order No. 290.160B

- LED light with hinged arm
  Order No. 290.020
- Large machine base
  - Machine-column diameter Ø 125 mm
  - Usable work table surface (L x W) 590 x 450 mm
  Order No. 205.036
- LED-light integrated in drill head 45°, LUMEN:150 cold white (P35 ST only)
  Order No. 290.070
- Cooling unit (separate tank) Contents max 15 l, flow rate max 30 l/min
  Order No. 290.340

FLOTT Machine Tools

Technical Data

Drilling capacity	30/35 mm
Tapping capacity (depending on size)	max. M24
Spindle	MKIII
Drilling depth	125 mm
Distance column-spindle	280 mm
Machine-column diameter	Ø 110 mm
Usable work table surface (L x W)	420 x 340 mm
T-slot size	quantity 2, distance 125 mm size width 13/26 mm
Speed indication	digital
Drill depth indication	digital
Drilling depth end stop	With fine adjustment
Table height adjustment	With rack
Motor 400 V 50 Hz	1.5/2 kW 2-speed motor
Spindle speed with intermediate transmission Speed range R1 Speed range R2	 125-2,000 1/min 80-1,280 1/min

SB P35 ST

Feed	manual
Distance spindle table	240-790 mm
Machine size (W x D x H) Machine size (incl. packaging) (W x D x H)	520 x 850 x 1,920 mm 637 x 1,096 x 2,120 mm
Weight	275 kg
Order No. R1	**205.193**
Order No. R2	**205.194**

SPECIAL OPTIONS ON PAGE 60 | 1 | 2 | 3 | 4 | 5 | 6 | 10

SB P35 STG PV electronic

Feed, inf. var. electromagnetic clutch and digital display	0–300 mm/min
Distance spindle table	240-790 mm
Machine size (W x D x H) Machine size (incl. packaging) (W x D x H)	420 x 830 x 1,920 mm 637 x 1,096 x 2,120 mm
Weight	300 kg
Order No. transparent top cover, R1	**205.222**
Order No. transparent top cover, R2	**205.224**
Order No. grey top cover, R1	**205.196**
Order No. grey top cover, R2	**205.197**

SPECIAL OPTIONS ON PAGE 60 | 1 | 2 | 3 | 4 | 7 | 10

ADDITIONAL OPTIONS FROM PAGE 61

Available software options for PV electronic

- **Safety module –** Spindle stops automatically in upper position
  Order No. **290.613**
- **Chip cutter module** to avoid long chips
  Order No. **290.612**
- **Multi feed unit –** Four free selectable feed speeds per cycle
  Order No. **290.614**

Column Drilling Machine
SB M5 ST
SB M5 ST MV

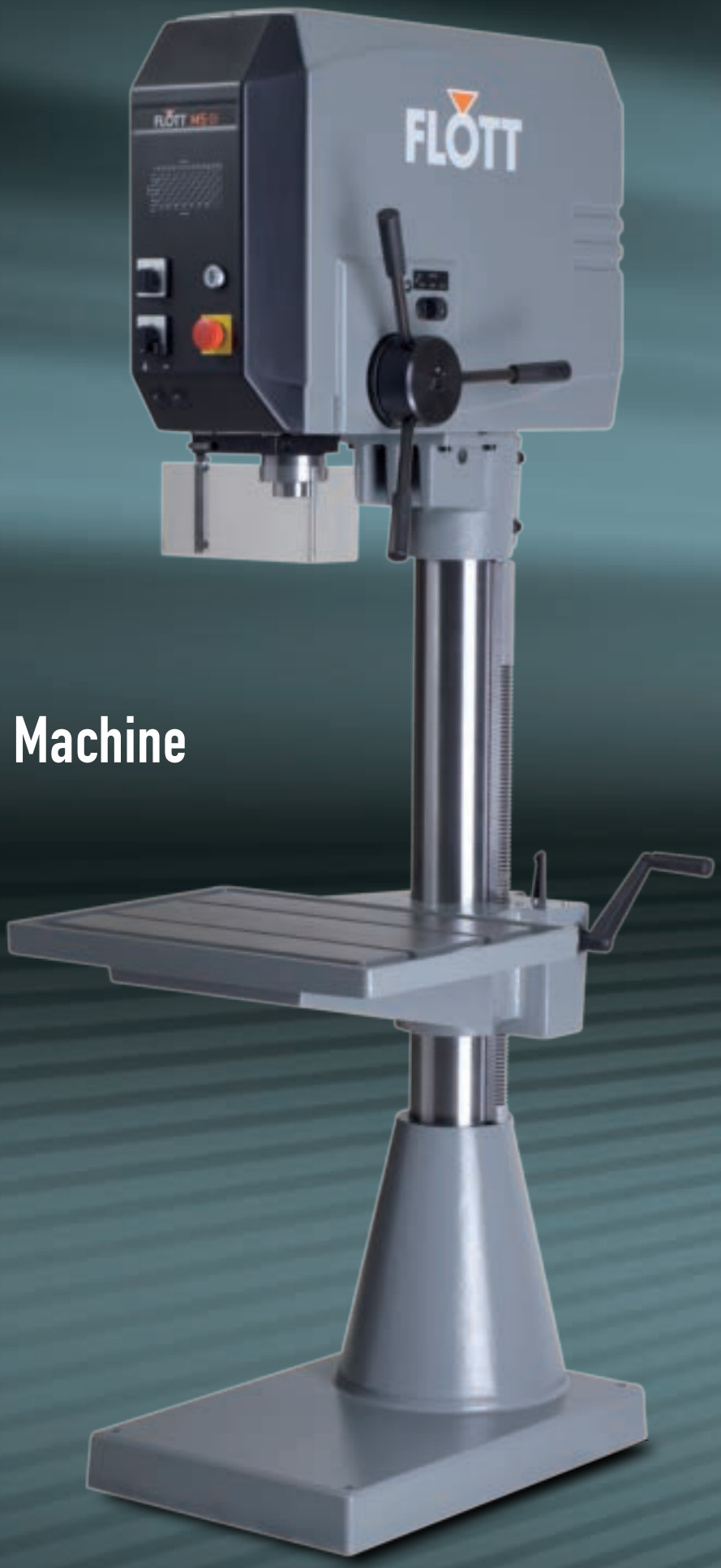

Fig.: SB M5 ST MV

By standard

- Manual reverse switch
- Inf. var. speed adjustment
- Emergency switch-off punch button
- Table height adjustment with rack
- No volt release
- Cable 1.5 m with CEE plug
- Spindle MK 4
- Drill depth end stop with fine adjustment
- Electrical drill guard
- Thermal overload protection

Optional/Accessories

- Combined drilling table/ machine vice opening 120 mm, clamping width 105 mm table size 350 x 350 mm
  Order No. 290.135

- Machined base plate with T Slots
  Order No. 290.378
- Star wheel with push buttons for feed on/off function (ST MV only)
  Order No. 290.120
- Machined base plate with integrated cooling unit max. contents 15 l, max. flow rate 30 l/min
  Order No. 290.160C

- LED light with hinged arm
  Order No. 290.020
- Cooling unit (separate tank) max. contents 15 l, max. flow rate 30 l/min
  Order No. 290.340
- Arbour MKIV/B18
  Order No. 290.323
- Keyless drill chuck tool holder: B18 clambing range: 3-16 mm concentricity: 0.30 mm
  Order No. 285.161
- Machine vice with prisms Opening 140 mm, clamping width 155 mm
  Order No. 281.211
- Spiral Drill Set according to DIN 338 HSSG 25 pcs., crosswise precision grounded 135°, Ø 1.0 – 13.0 x 0.5 mm
  Order No. 285.124
- LED-light integrated in drill head 45°, LUMEN:150 cold white
  Order No. 290.070

FLOTT Machine Tools

Technical Data

Drilling capacity	35/40 mm
Tapping capacity (depending on size)	max. M30
Spindle	MKIV
Drilling depth	160 mm
Distance column-spindle	300 mm
Machine-column diameter	Ø 125 mm
Usable work table surface (L x W)	590 x 450 mm
T-slot size	quantity 2, distance 160 mm size width 14/26 mm
Speed indication	Scale
Drill depth indication	Scale
Drill depth end stop	With fine adjustment
Table height adjustment	With rack
Motor 400 V 50 Hz	1.5/3.0 kW 2-speed motor
Spindle speed, inf. var. with intermediate transmission	100-2,000 1/min

SB M5 ST

Feed	manual
Distance spindle table	150-700 mm
Machine size (WxDxH) Machine size (incl. packaging) (WxDxH)	610 x 850 x 1,920 mm 672 x 1,096 x 2,142 mm
Weight	420 kg
Order No.	**205.204**

SPECIAL OPTIONS ON PAGE 60 | 1 | 2 | 3 | 4 | 5 | 6 | 11

SB M5 ST MV

Feed Incl. electromagnetic clutch	0.10/0.16/0.25 mm/min.
Distance spindle table	150-700 mm
Machine size (WxDxH) Machine size (incl. packaging) (WxDxH)	610 x 850 x 1,920 mm 672 x 1,096 x 2,142 mm
Weight	445 kg
Order No.	**205.207**

SPECIAL OPTIONS ON PAGE 60 | 1 | 2 | 3 | 4 | 5 | 7 | 11

ADDITIONAL OPTIONS FROM PAGE 61

Column Drilling Machine
SB P40 ST
SB P40 STG PV electronic

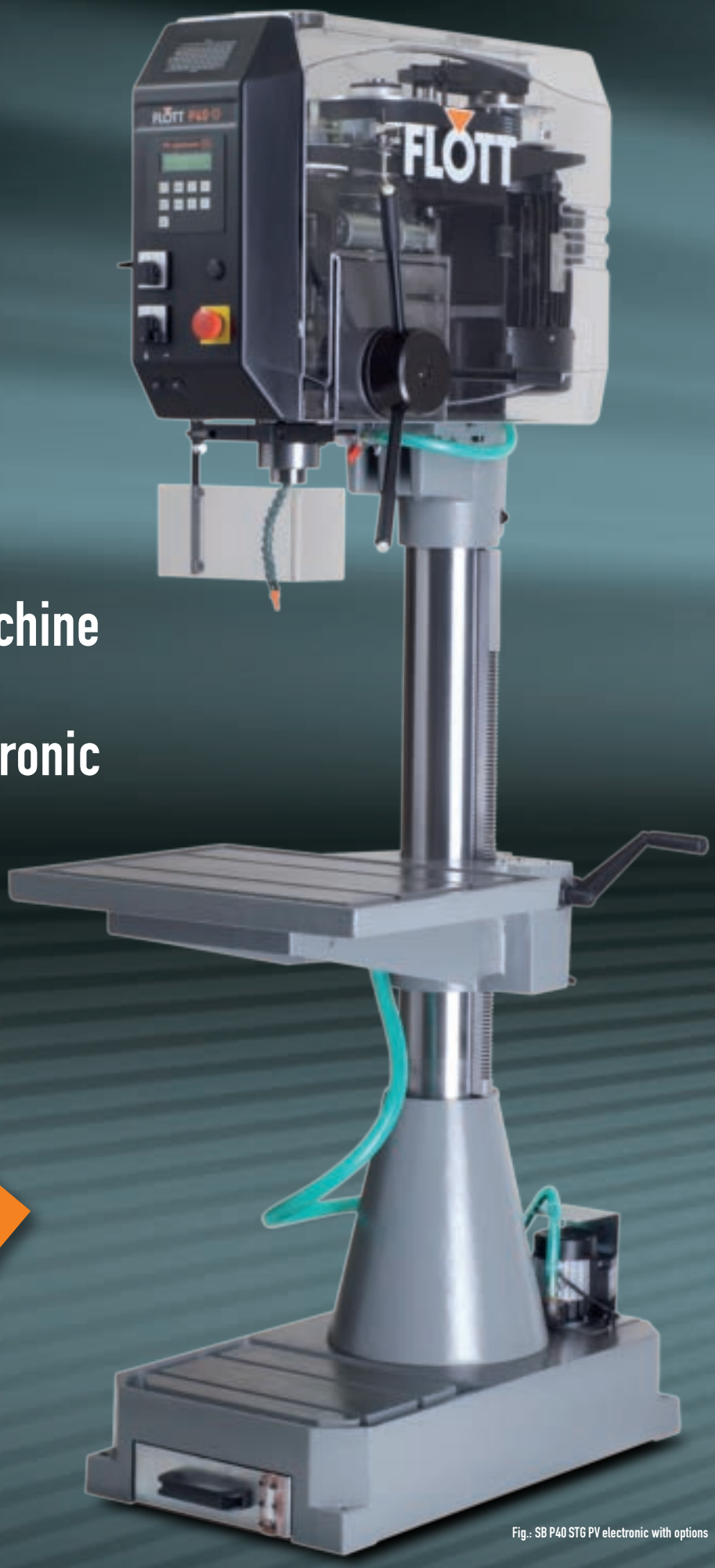

SB P40 STG PV electronic R2

to go

with Chip cutter module No. 290.612, Cooling unit No. 290.340 and Multi feed unit No. 290.614

available for immediate delivery

Fig.: SB P40 STG PV electronic with options

By standard

- Drill depth end stop with fine adjustment
- Emergency switch-off punch button
- No volt release
- Inf. var. speed adjustment
- Table height adjustment with rack
- Cable 1.5 m with CEE plug
- Electrical drill guard
- Thermal overload protection

Series P40 ST

- Digital display for speed
- Digital display for drilling depth
- Manual reverse switch

Series P40 STG PV electronic

- Digital display for speed
- Digital display for drill depth
- Digital display for feed speed
- Continuously electronically variable feed incl spindle control
- Automatic cut-off function on reaching programmed drilling depth
- Tapping unit, tapping capacity max M30
- Tapping depth adjustment using digital display
- Easily programmable drill depth end stop
- Star wheel with buttons for feed on/off function
- LED ligh by standard (Order No. 290.070)t

Optional/Accessories

- Tapping unit (P40 ST only) max. M30, tapping depth adjustment via digital display
  Order No. 290.622
- Motor with separate fan
  Order No. 290.619
- Combined drilling table/ machine vice opening 120 mm, clamping width 105 mm table size 350 x 350 mm
  Order No. 290.135
- Machined base plate
  Order No. 290.378
- Machined base plate with integrated cooling unit, max. contents 15 l, max. flow rate 30 l/min
  Order No. 290.160C
- LED light with hinged arm
  Order No. 290.020
- LED-light integrated in drill head 45°, LUMEN:150 cold white (P40 ST only)
  Order No. 290.070
- Cooling unit (separate tank) Contents max 15 l, flow rate max 30 l/min
  Order No. 290.340

FLOTT Machine Tools

Technical Data

Drilling capacity	35/40 mm
Tapping capacity (depending on size)	max. M30
Spindle	MKIV
Drilling depth	160 mm
Distance column-spindle	300 mm
Machine-column diameter	Ø 125 mm
Usable work table surface (L x W)	590 x 450 mm
T-slot size	quantity 2, distance 160 mm size width 14/26 mm
Speed indication	digital
Drill depth indication	digital
Drilling depth end stop	With fine adjustment
Table height adjustment	With rack
Machine size (W x D x H) Machine size (incl. packaging) (W x D x H)	610 x 850 x 1,920 mm 637 x 1,096 x 2,120 mm
Motor 400 V 50 Hz	1.5/3 kW 2-speed motor
Spindle speed with intermediate transmission Speed range R1 Speed range R2	 100-2,000 1/min 70-1,400 1/min

SB P40 ST

Feed	manual
Distance spindle table	150-700 mm
Weight	420 kg
Order No. R1	**205.205**
Order No. R2	**205.206**

SPECIAL OPTIONS ON PAGE 60 | 1 | 2 | 3 | 4 | 5 | 6 | 11

SB P40 STG PV electronic

Feed, inf. var. with electromagnetic clutch and digital display	0–300 mm/min
Distance spindle table	150-700 mm
Weight	440 kg
Order No. transparent top cover, R1	**205.226**
Order No. transparent top cover, R2	**205.227**
Order No. grey top cover, R1	**205.208**
Order No. grey top cover, R2	**205.209**

SPECIAL OPTIONS ON PAGE 60 | 1 | 2 | 3 | 4 | 7 | 11

ADDITIONAL OPTIONS FROM PAGE 61

Available software options for PV electronic

- **Safety module** – Spindle stops automatically in upper position
  Order No. 290.613
- **Chip cutter module** to avoid long chips
  Order No. 290.612
- **Multi feed unit** – Four free selectable feed speeds per cycle
  Order No. 290.614

Gear drilling machine GB 50 MV

Fig.: GB 50 MV with options

FLOTT Machine Tools

By standard

- Mechanical auto-feed
- Machined base plate with T slots and built-in cooling unit
- High precision drill depth end adjustment
- Turnable and tiltable table
- Motor protection switch with undervoltage release
- Electrical drill guard
- Machine light
- Automatic tool ejector
- Gears of hardened and ground steel
- Automized Central lubrication
- Hand wheel for precise manual feed
- Switch for r.h. and l.h. rotation
- Push button in star handle with feed on/off function

Options/Accessories

- Tapping unit
  Order No.: 287.045
- Machine vice with prisms
  jaw width 140 mm,
  clamping width 155mm
  Order No. 281.211
- Keyless drill chuck B 18 3-16 mm,
  accuracy 0,3mm
  Order No. 285.161
- Arbor, size MK 4 B18
  Order No. 290.323

Further options on request against surcharge

Technical data

Drilling capacity	50 mm
Tapping capacity (depending on pitch)	M 36
Spindle	MK IV
Drill depth	230 mm
Distance column to spindle	400 mm
Column diameter	200 mm
Usable table size	550 x 550 mm
T Slots	3pcs, distance 160 mm size 16/28mm
Speed indication	scale
Drill depth indication	scale
Distance spindle to table	50-850 mm
Table height adjustment	with rack
machine size (BxTxH) machine size packed (BxTxH)	600 x 1,060 x 2,450 mm 680 x 2,600 x 1,210 mm
Motor 400 V, 3phase	3.0 kW
Spindle speed 9 steps	54-75-109-169-237 344-507-712-1,032 1/min
mechanical spindle feed 0.1-0.2-0.3-0.4 mm/rev	

GB 50 MV

Weight	795 kg
Order No.	**287.040**
Special color (as per RAL table only)	on request.

ADDITIONAL OPTIONS FROM PAGE 61

Gear drilling machine GB 50 MV plus

Fig.: GB 50 MV plus with options

FLOTT Machine Tools

By standard

- Automatic electromagnetical feed
- Machined base plate with T slots and built-in cooling unit
- High precision drill depth end adjustment
- Turnable and tiltable table
- Motor protection switch with undervoltage release
- Electrical drill guard
- Machine light
- Automatic tool ejector
- Gears of hardened and ground steel
- Automized Central lubrication
- Hand wheel for precise manual feed
- Switch for r.h. and l.h. rotation
- Push button in star handle with feed on/off function

Options/ Accessories

- Tapping unit
  Order No.: 287.056
- Machine vice with prisms, jaw width 140mm, clamping width 155 mm
  Order No. 281.211
- Keyless drill chuck B18 3-16 mm, concentricity 0,3 mm
  Order No. 285.161
- Arbor MK 4 -B 18
  Order No. 290.323

Further options on request

Technical data

Drilling capacity	50 mm
Tapping capacity (depending on pitch)	M 36
Spindle	MK IV
Drill depth	230 mm
Distance column to spindle	400 mm
Column diameter	200 mm
Usable table size	550 x 550 mm
T Slots	3pcs, distance 160 mm Size 16/28 mm
Speed indication	Scale
Drill depth indication	Scale
Distance spindle to table	50-850 mm
Table height adjustment	with rack
Machine size (BxTxH) Machine size packed (BxTxH)	600 x 1,060 x 2,450 mm 680 x 2,600 x 1,210 mm
Motor 400 V, 3phase	3.0 kW
Spindle speed in 9 steps (with gear box)	54-75-109-169-237 344-507-712-1,032 1/min
Automatic and electromagnetic spindle feed 0.1-0.2-0.3-0.4-0.5-0.6 mm/rev	

GB 50 MVplus

Weight	805 kg
Order No.	**287.050**
Special color (as per RAL table only)	on request.

ADDITIONAL OPTIONS FROM PAGE 61

Column Drilling Machine SB P50 STG MV

Fig.: SB P50 STG MV with options

FLOTT Machine Tools

By standard

- Drive: combined belt and gear drive
- Automatic electromagnetical spindle feed
- Machined base plate with T-slots and built-in cooling unit
- High precision mechanical end stop
- Automatic tool ejection
- Machine light
- Motor protection switch with undervoltage release
- Emergency off push button
- Electrical drill guard
- Turnable and tiltable table
- Tapping unit
- Gear lubrication with automatic pump
- Push button for feed on/off control
- Stepless speed adjustment, frequency inverter and with three speed gear drive for step change

Accessories

- Machine vice with prims jaw width 140 mm, opening 155 mm
  Order No. 281.211
- Keyless drill chuck B18, 3-16 mm, accuracy 0,30 mm
  Order No. 285.161
- Arbor B18 - MK 4
  Order No. 290.323

Technical data

Drilling capacity		50 mm
Tapping capacity (depending on pitch)		M 42
Spindle		MK IV
Drill depth		200 mm
Distance column to spindle		360 mm
Column diameter		175 mm
Usable table size		550 x 550 mm
T Slots		3 pcs, distance 160 mm size width 16/28 mm
Speed indication		digital
Drill depth indication		scale
Distance spindle to table		55-850 mm
Table height adjustment		with rack
machine size (B x T x H) machine size packed (B x T x H)		550 x 950 x 2,170 mm 740 x 2,220 x 1,320 mm
Motor 400 V, 3phase		4.0 kW
Adjustable spindle speed with 3 step gear box	step I step II step III	30-230 1/min 90-730 1/min 190-1,500 1/min
Automatic and electromagnetic spindle feed 0.1-0.2-0.3-0.4 mm/rev		

SB P50 STG MV*

Weight	850 kg
Order No.	**287.060**
Special color (as per RAL table only)	on request.

ADDITIONAL OPTIONS FROM PAGE 61

*This drill press does meet all requirements according the norm DIN EN 55011:2011-04 [Classification A]. In case of a malfunction, please contact the manufacturer.

Gear drilling machine GB 70 MVplus

Fig.: GB 70 MVplus with options

FLOTT Machine Tools

By standard

- Automatic electromagnetical feed
- Machined base plate with T-slots and built-in Cooling unit
- High precision mechanical end stop
- Turnable and tiltable table
- Motor protection switch with undervoltage release
- Emergency off push button
- Electrical drill guard
- Machine light
- Automatic tool ejection
- Gear of hardened and ground steel
- Gear lubrication with automatic pump
- Handwheel for high-precision manual feed
- Reverse switch for r.h. and l.h.rotation
- Push button for feed on/off control

Options/ Accessories

- Tapping unit
  Order No.: 287.076
- Machines vice with prisms, jaw width 140 mm, clamping width 155 mm
  Order No. 281.211
- Keyless drill chuck B18 3-16 mm, concentricity 0,3 mm
  Order No. 285.161
- Arbor B18 - MK 5
  Order No. 287.097

Technical data

Drilling capacity	70 mm
Tapping capacity (depending on pitch)	M 50
Spindle	MK V
Drill depth	260 mm
Distance column to spindle	420 mm
Column diameter	220 mm
Usable table size	600 x 600 mm
T Slots	3pcs, distance 191 mm width 18/30 mm
Speed indication	scale
Drill depth indication	scale
Distance spindle to table	25-825 mm
Table height adjustment	with rack
Machine size (BxTxH) Machine size packed (BxTxH)	600 x 1,060 x 2,640 mm 770 x 2,760 x 1,220 mm
Motor 400 V, 3phase	5.5 kW
Spindle speed 12 steps (gear)	51-64-84-110-158-198-262 342-447-559-738-966 1/min
Automatic and electromagnetic spindle feed 0.1-0.2-0.3-0.4-0.5-0.6 mm/rev	

GB 70 MVplus

Weight	940 kg
Order No.	**287.070**
Special color (as per RAL table only)	on request.

ADDITIONAL OPTIONS FROM PAGE 61

Column Flow Drilling Machine SB M3 ST-FB

FLOTT Machine Tools

By standard

- Inf. var. speed adjustment
- Emergency switch-off punch button
- No volt release
- Table height adjustment with rack
- Drill depth end stop with fine adjustment
- Cable 1.5 m with CEE plug
- Electrical drill guard
- Thermal overload protection

Optional/ Accessories

- Machined base plate with T Slots
  Order No. 290.378
- Machined base plate with integrated cooling unit max. contents 15 l, max. flow rate 30 l/min
  Order No. 290.160B
- LED light with hinged arm
  Order No. 290.020
- Cooling unit (separate tank) max. contents 15 l, max. flow rate 30 l/min
  Order No. 290.340
- Arbour MKIII/B18
  Order No. 285.323
- Keyless drill chuck tool holder: B18 clamping range: 3-16 mm concentricity: 0.30 mm
  Order No. 285.161
- Machine vice with prisms Opening 120 mm, clamping width 105 mm
  Order No. 281.207
- Spiral Drill Set according to DIN 338 HSSG 25 pcs., crosswise precision grounded 135°, Ø 1.0 – 13.0 x 0.5 mm
  Order No. 285.124
- LED-light integrated in drill head 45°, LUMEN:150 cold white
  Order No. 290.070

Technical Data

Flow drilling capacity (3 mm sheet metal)	18 mm
Spindle	MKIII
Drilling depth	125 mm
Distance column-spindle	260 mm
Machine-column diameter	Ø 110 mm
Usable work table surface (L x W)	420 x 340 mm
T-slot size	quantity 2, distance 125 mm size width 13/26 mm
Speed indication	Scale
Drill depth indication	Scale
Drill depth end stop	With fine adjustment
Feed	manual
Table height adjustment	With rack
Machine size (W x D x H) Machine size (incl. packaging) (W x D x H)	420 x 830 x 1,900 mm 572 x 940 x 2,140 mm
Motor 400 V 50 Hz	3 kW
Spindle speed, inf. var with intermediate transmission	500-4,000 1/min

SB M3 ST-FB

Distance spindle table	240-790 mm
Weight	275 kg
Order No.	**205.188**

SPECIAL OPTIONS ON PAGE 62 | 1 | 2 | 3 | 4 | 5 | 6 | 10

Column Flow Drilling Machine
SB P40 ST-FB
SB P40 STG-FB PV electronic

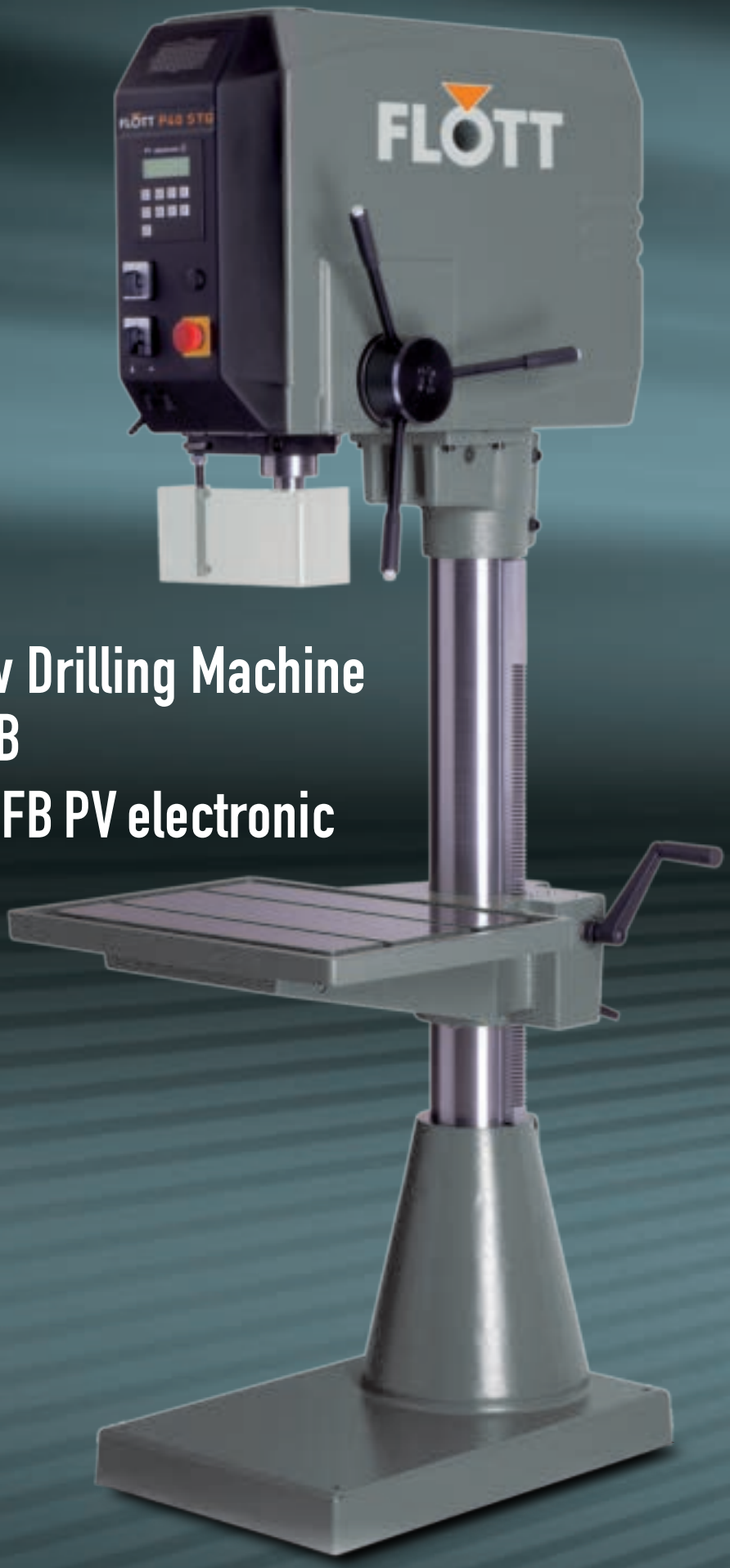

Fig.: SB P40 ST-FB PV electronic

Flow drilling

is being used for the perforation of thin walled metal sheets.

The method of flowdrilling forms a sleeve by reshaping of the existing material . The material prolongation increases the number of leading threads up to three to five times. The material is not chipped, but used for loadable connections.

Advantages of flow drilling:

- Low costs per thread
- Loadable joints
- High-quality threads
- No special equipment needed
- Low start-up costs
- No third party material needed
- Less steps of production
- No chip removal

Accessories

- Combined drilling table/ machine vice opening 120 mm, clamping width 210 mm
  Order No. 281.210

Available software options for PV electronic

- **Safety module –** Spindle stops automatically in upper position
  Order No. 290.613
- **Chip cutter module** to avoid long chips
  Order No. 290.612
- **Multi feed unit –** Four free selectable feed speeds per cycle
  Order No. 290.614

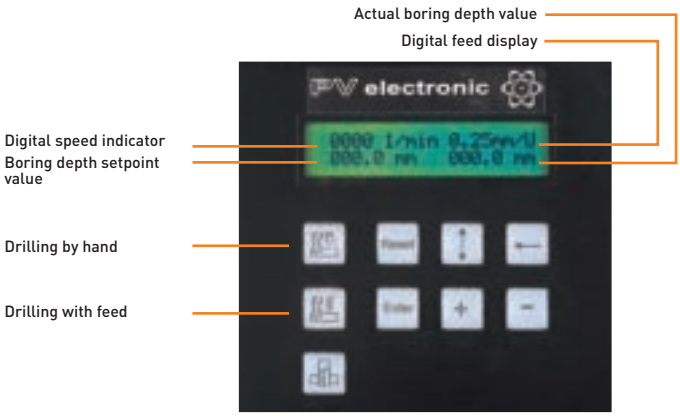

FLOTT Machine Tools

Technical Data

Flow Drilling capacity (3 mm sheet iron)	20 mm
Spindle	MKIV
Drilling depth	160 mm
Distance column-spindle	300 mm
Machine-column diameter	Ø 125 mm
Usable work table surface (L x W)	590 x 450 mm
T-slot size	quantity 2, distance 160 mm size width 14/26 mm
Speed indication	digital
Drill depth indication	digital
Drilling depth stop	With fine adjustment
Feed	manual
Table height adjustment	With rack
Machine size (W x D x H) Machine size (incl. packaging) (W x D x H)	590 x 830 x 2,100 mm 637 x 1,096 x 2,120 mm
Motor 400 V 50 Hz, single speed motor	3 kW
Spindle speed, inf. var with speed range R1	500-4,000 1/min
Motor 400 V 50 Hz	1.5/3 kW 2-speed motor
Spindle speed, inf. var with speed range R2	250-4,000 1/min

SB P40 ST-FB

Distance spindle table	150-700 mm
Weight	420 kg
Order No. R1	**205.212**
Order No. R2	**205.213**

SPECIAL OPTIONS ON PAGE 62 | 1 | 2 | 3 | 4 | 5 | 6 | 11

SB P40 STG-FB PV electronic

Feed inf. var. with electromagnetic clutch and digital display	0-300 mm/min
Distance spindle table	150-700 mm
Weight	445 kg
Order No. R1	**205.217**
Order No. R2	**205.218**

SPECIAL OPTIONS ON PAGE 62 | 1 | 2 | 3 | 4 | 5 | 7 | 11

ADDITIONAL OPTIONS FROM PAGE 61

CNC-Boring & Milling Center
BC-30 Elite

FLOTT Machine Tools

Electrical equipment

- Machine Control FANUC oi-MD
- 10.4 " LCD color monitor with flat keyboard
- Built-in harddrive 512 KB
- Minimum increment input: 0.001 mm
- Minimum travel: 0.001 mm
- Data interface: RS232C and LAN
- Max. Controllable axes: 5
- Simultaneously controlled axes: 4
- Emergency stop with self-diagnostic function

Technical Features

- High speed tool changer with 15 tools storage capacity
  T-T: 1.3 sec.
  C-C: 1.9 sec.
- 28% enlarged ball-screw spindle for XY-axis
- Increased working table area of 660 mm x 350 mm
- The Z-axis spindle acceleration was increased up to 1.0 G

Technical Data

Travel X-Axis	500 mm
Travel Y-Axis	300 mm
Travel Z-Axis	300 mm
Distance spindle nose to table	200-500 mm
Distance of machine stand to table center	380 mm
Clamping table (L x W)	660 x 350 mm
Load of clamping table: (max.)	150 kg
Spindle speed (by standard)	50-10,000 U/Min.
Spindle motor (10 min. continuously)	3,.7/1.1 kW
Power Network	200 V/50 Hz
Rapid traverse speed in all axes	48 m/min.
Capacity Tool magazine	15
Max. Tool Ø	80 mm
Max. Tool length	200 mm
Tool weight (max.)	3 kg
Tool holder	BT 30
Machine Footprint	1,500 x 2,660 x 2,128 mm
Weight	2,200 kg
Order No.	**200.090**

CNC-Boring & Milling Center
BC-40 Super

FLOTT Machine Tools

Electrical equipment

- Machine Control FANUC oi-MD
- 10.4 " LCD color monitor with flat keyboard
- Built-in harddrive 512 KB
- Minimum increment input: 0.001 mm
- Minimum travel: 0.001 mm
- Data interface: RS232C and LAN
- Max. Controllable axes: 5
- Simultaneously controlled axes: 4
- Emergency stop with self-diagnostic function

Technical Features

- High speed tool changer with 15 tools storage capacity
  T-T: 1.4 sec.
  C-C: 2.2 sec.

Technical Data

Travel X-Axis	700 mm
Travel Y-Axis	400 mm
Travel Z-Axis	400 mm
Distance spindle nose to table	200-600 mm
Distance of machine stand to table center	448 mm
Clamping table (L x W)	800 x 400 mm
Load of clamping table	330 kg
Spindle speed (by standard)	50-8,000 U/Min.
Spindle motor (10 min. continuously)	7.5/5.5 kW
Power Network	200 V/50 Hz
Rapid traverse speed in all axes	56 m/Min.
Capacity Tool magazine	15
Max. Tool Ø	100 mm
Max. Tool length	250 mm
Tool weight (max.)	5 kg
Tool holder	BT40
Machine Footprint	1,830 x 2,090 x 2,422 mm
Weight	3,000 kg
Order No.	**200.095**

Special options

1

Machines with special voltage motor: **available on request**

Order No. 290.100

2

Machine light with transformer, incl. bulb

(for machines with non-standard voltage)

Order No. 201.510

3

Machined base plate with T-slots

Only for column drill presses (SB models) starting with column dia. 82mm and higher

Order No. 290.378

4

Food button as "emergency switch-off"

Order No. 290.320

5

Food on/off switch

Order No. 290.321

6

Food reverse switch

Order No. 290.324

7

Food start/stop switch – function of star wheel buttons

(only for Pv/MV type drill presses)

Order No. 290.401

8

Extended column 70 mm diameter (max. 200 mm)

Order No. 296.286

9

Extended column 82 mm diameter (max. 150 mm)

Order No. 296.287

10

Extended column 110 mm diameter (max. 300 mm)

Order No. 296.288

11

Extended column 125 mm diameter (max. 300 mm)

Order No. 296.289

12

Drill depth fixed end stop

(for Turbodrill, TB 10 plus, 13 plus series and 15 plus series only)

Order No. 212.716

Accessories

All machines made in colours different from standard
Special colours (RAL) available at extra charge*
(drill presses only)

Order No. 290.200
When ordering, please state order no. and RAL colour.

LED workplace light LUX 1 incl. table clamp
600 lumen, 8 Watts with flexible shaft and rubber covered magnetic holder, light temperature cold white 6000 K, overall length 560 mm, flexible shaft length 350 mm, lamp dia 69 mm

Order no. 290027

LED workplace light LUX 2 with table clamp
350 lumen, 3 Watts with flexible shaft und rubber covered magnetic holder, light temperature 5000 K, overall length 600mm, flexible shaft length 420 mm, head section LxWxH 75x25x9 mm

Order no. 290028

Minimum lubrication system
A small pump brings pure lubrication fluid to the top of the despenser, where both compressed air and lubricant are mixed and formed to a spray mist. Lubricant and compressed air are guided separately from each other to the nozzle. The relation between compressed air and lubricant can be reproducable adjusted.

Advantages:
- As the hose must be filled with lubricant without any bubbles, the spraying process starts immediately on engagement.
- Wide adjustment range of the dose pump, from hardly visible up to the Maximum flow capacity rated up to 3 cm^3 /min.

The minimum lubrication system: As less as possible, but as much as necessary. Always optimal dosed for production purpose.

Order No. 290.395

Electrical cooling unit
- Complete with pump, tank and tube
- Cable and switch
- Dimension 350 x 250 x 250 mm
- Mains 230 V 50 Hz
- Contents max. 15 l
- Flow rate max. 30 l/min
- Needs loadable N conductor
- Not usable for: TB 10 Eco Plus
- Standard colour RAL 7005 grey

Order No. 290.340

Accessories

F0 Precision sliding table*

- Table size 230 x 164 mm
- Traverse path (Travelling Distance) x/y 120 x 110 mm
- Scale increments 0.05 mm
- Weight 16 kg
- Suitable for series 18 Plus and 23 Plus

Order No. 281.085

Mounting plate
Order No. 281.087

F1 Precision sliding table*

- Table size 330 mm x 220 mm
- Traverse path (Travelling Distance) x/y 190 x 130 mm
- Scale increments 0.05 mm
- Weight 33 kg
- Suitable for series 18/23 Plus, E3/M3/P30/E4/M4/P35

Order No. 281.090

Mounting plate
Order No. 281.092

F2 precision sliding table*

- Table size 430 mm x 240 mm
- Traverse path (Travelling Distance) x/y 240 x 160 mm
- Scale increments 0.05 mm
- Weight 46 kg
- Suitable for series E5 / M5 ST / P40

Order No. 281.095

Mounting plate
Order No. 281.092

***Needs mounting plate for fixation on the machine table.**

Accessories

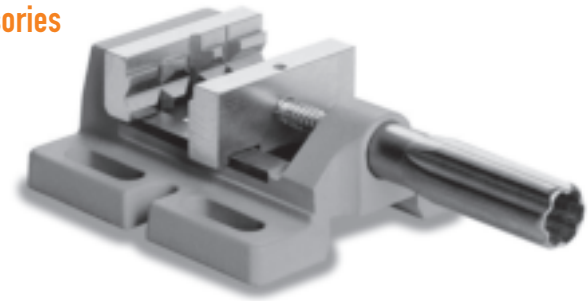

Moderately heavy machine vice made of cast iron with ergonomic handle

▶ **Nr. 1: 85**

clamping jaw width:	85 mm
clamping range:	75 mm
clamping jaw height:	30 mm
Weight:	3.3 kg

Order No. 281.205

▶ **Nr. 1: 100**

clamping jaw width:	100 mm
clamping range:	95 mm
clamping jaw height:	30 mm
Weight:	4.0 kg

Order No. 281.206

▶ **Nr. 1: 120**

clamping jaw width:	120 mm
clamping range:	105 mm
clamping jaw height:	30 mm
Weight:	6.6 kg

Order No. 281.207

▶ **Spare pair of clamping jaws** (2 pcs/set)

Nr. 1: 85
Order No. 281.212

Nr. 1: 100
Order No. 281.213

Nr. 1: 120
Order No. 281.214

Accessories

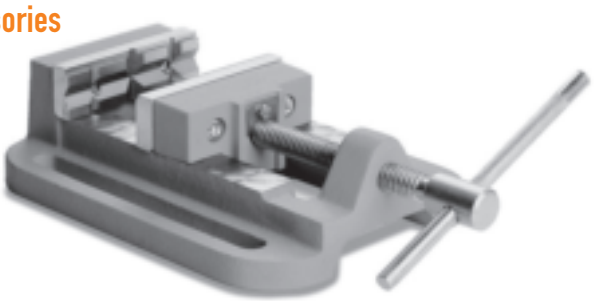

Heavy machine vice, hardened and closed jaws with toggle for maximum tension

▶ **Nr. 2: 100**

clamping jaw width:	100 mm
clamping range:	90 mm
clamping jaw height:	40 mm
Weight:	7.5 kg

Order No. 281.209

▶ **Nr. 2: 120**

clamping jaw width:	120 mm
clamping range:	120 mm
clamping jaw height:	40 mm
Weight:	11.5 kg

Order No. 281.210

▶ **Nr. 2: 140**

clamping jaw width:	140 mm
clamping range:	155 mm
clamping jaw height:	40 mm
Weight:	13.5 kg

Order No. 281.211

▶ **Spare pair of clamping jaws** (2 pcs/set)

Nr. 2: 100
Order No. 281.215

Nr. 2: 120
Order No. 281.216

Nr. 2: 140
Order No. 281.217

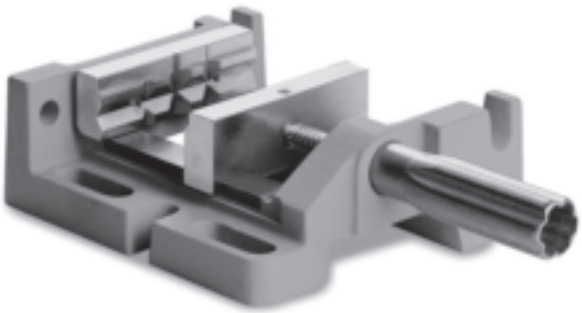

All-purpose angle vice with three face milled contact surfaces

▶ **Nr. 3: 100**

clamping jaw width:	100 mm
clamping range:	85 mm
clamping jaw height:	30 mm
Weight:	4.9 kg

Order No. 281.208

▶ **Spare pair of clamping jaws** (2 pcs/set)

Nr. 3: 100
Order No. 281.218

Accessories

Standard Drill Chuck
- Clamping range: 0,5-8 mm
- Tool holder B 12 for Turbodrill
- Concentricity: 0.20 mm

Order No. 285.103

Precision keyless drill chuck, grinded, self-tightening
- Clamping range: 0.5-6 mm
- Tool holder: B 16
- Concentricity: 0.05 mm

Order No. 285.104

Keyless precison drill chuck, ground self-tightening, for clockwise and counterclockwise work (max 8000 rpm)
- Clamping range 1-13 mm
- Tool holder B16
- Concentricity: 0.06 mm

Order No. 285.064

Keyless drill chuck, self-tightening
- Clamping range 1-13 mm
- Tool holder B16
- Concentricity: 0.30 mm

Order No. 285.131

Keyless drill chuck, self-tightening
- Clamping range 3-16 mm
- Tool holder B18
- Concentricity:0.30 mm

Order No. 285.161

Two-jaw-chuck, no loosening due to vibration, with additional entrainment for tapping drills M4-M12 DIN 371

- Clamping range: 1-10 mm
- Tool holder: B 16
- Length: 80 mm

Order No. 285.109

Accessories

Tapping chuck
Wide range collet with lenght compensation
(self feed tension and compression)
Suitable for rh and lh tapping

- **GBF 12/MK 2**
  Cutting range M3-M12
  Without collets
  Art.-No. 285.083
- **Multi range collet for GBF 12**
  Clamping range 3.5-6.5 mm
  Art.-No. 285.084
  Clamping range 6.5-10 mm
  Art.-No. 285.085

- **GBF 18/MK 3**
  Cutting range M 5 – M 18
  Without collets
  Art.-No. 285.086
- **Multi range collet for GBF 18**
  Clamping range 2.8-7 mm
  Art.-No. 285.087
  Clamping range 7-13 mm
  Art.-No. 285.088

- **GBF 30/ MK 4**
  Cutting range M 10 – M 30
  Without collets
  Art.-No. 285.089
- **Multi range collet for GBF 30**
  Clamping range 10-16 mm
  Art.-No. 285.090
  Clamping range 16-23 mm
  Art.-No. 285.091

Accessories

HSS G standard spiral drill set in ABS Box

- DIN 338 N, 25 parts
  1-13 mm x 0,5 mm
  Art.-No. 285.124

HSS-G spiral drill set in ABS-Box

- Wide range spiral drills with enhanced
  core and parabolic groove for better chip removal
  DIN 338, cross ground 130°, 25 parts
  1-13 mm x 0,5 mm
  Art.-No. 285.123

HSS countersink and deburring drill set in ABS Box

- DIN 335 C, 90°, 6 parts
  6,3-8,3-10,4-12,4-16,5-20,5 mm
  Art.-No. 285.162

HSS-E tap drill set in ABS Box

- DIN 371/376, M 3 – M 12, Form B,
  with core drill, 14 parts, for through hole cutting
  Art.-No. 285.163

HSS-E tap drill set in ABS Box

- DIN 371/376, M 3 – M 12, Form C
  35° r.h. spiral grooves
  14 parts, for blind hole cutting
  Art.-No. 285.164

Accessories

Arbour

Size **B 16/MK I**
Order no. 285.310

Size **B 16/MK II**
Order no. 285.320

Size **B 18/MK II**
Order no. 285.321

Size **B 18/MK III**
Order no. 285.323

Size **B 18/MK IV**
Order no. 290.323

Size **B 18/MK V**
Order no. 287.097

Reducing chuck

Size **MK II/MK I**
Order no. 285.330

Size **MK III/MK II**
Order no. 285.331

Size **MK III/MK I**
Order no. 285.332

Size **MK IV/MK III**
Order no. 285.333

Size **MK IV/MK II**
Order no. 285.336

Size **MK V/MK IV**
Order no. 285.092

Drill drift, semi-mechanical
Size **1-3**
Order no. 285.334

Size **4-6**
Order no. 285.335

Options/add-on kit

Drill guard incl. electrical lock; standard (add-on-kit)
All Flott drill presses are equipped with drill-guard incl. electrical lock. Order the add-on kit in order to comply to EN safety regulations. Machine is switched-off if the drill guard is opened

Series 10 STW / P18 / M1 / E1/E2/E3/E4/E5
Order No. 290.832
Spare shield: 120 x 170 mm
Order No. 290.825

Series M2/M3/M4/M5 / P23/P30/P35/P40
Bestell-Nr. 290.855
Spare shield: 120 x 250 mm
Order No. 290.854

Complete Drill guard in accordance with DIN EN 12717, extendable, incl. micro switch locking (replacement set)

Series 10 STW
Order-No. 290.031
Spare shield:170 x 250 x 130 mm
Order 290.030

Series TB 10 Eco Plus
Order-No. 290.045

Series 13Plus, 10Plus and Turbo Drill
Order-No. 290.032
Spare shield:170 x 250 x 130 mm
Order-No. 290.030

Series E1, M1, P18, E2, M2, P23, E3, E4, E5
Order-No. 290.036
Spare shield:210 x 250 x 150 mm
Order-No. 290.035

Series M3, P30, M4, P35, M5, P40
Order-No. 290.041
Spare shield:270 x 300 x 150 mm
Order-Nr. 290.040

Outside Dimensions Drilling Machines

Outside dimensions drill presses including packaging
width x depth x height in mm

Series 10 Eco Plus, Turbo Drill, 10/13/15/18/23 Plus	
TB 10 Eco ▶Plus	430 x 680 x 810
Turbo Drill	452 x 700 x 1,130
TB 10 ▶Plus	452 x 700 x 1,130
TB 13 ▶Plus	452 x 700 x 1,130
SB 13 ▶Plus	572 x 936 x 2,142
TBZ 13 ▶Plus (without base)	940 x 570 x 1,600
TBZ 13 ▶Plus (with base)	800 x 600 x 1,000
TB 15 ▶Plus	452 x 700 x 1,130
SB 15 ▶Plus	572 x 936 x 2,142
TBZ 15 ▶Plus (without base)	940 x 570 x 1,600
TBZ 15 ▶Plus (with base)	800 x 600 x 1,000
TB 18 ▶Plus	540 x 940 x 1,612
SB 18 ▶Plus	572 x 936x 2,142
TBZ 18 ▶Plus (without base)	540 x 940 x 1,600
TBZ 18 ▶Plus (with base)	800 x 600 x 1,050
TB 23 ▶Plus	570 x 940 x 1,600
SB 23 ▶Plus	637 x 1,069 x 2,120
TBZ 23 ▶Plus (without base)	570 x 940 x 1,600
TBZ 23 ▶Plus (with base)	637 x 1,096 x 2,120
Series E	
SB E3	572 x 940 x 2,140
SB E4	637 x 1,096 x 2,120
SB E5	637 x 1,096 x 2,120
Series M	
SB M3 ST	637 x 1,096 x 2,120
SB M3 ST MV	637 x 1,096 x 2,120
SB M4 ST	637 x 1,096 x 2,120
SB M4 ST MV	637 x 1,096 x 2,120
SB M5 ST	637 x 1,096 x 2,120
SB M5 ST MV	637 x 1,096 x 2,120
SB M3 ST-FB	637 x 1,096 x 2,120
Series P	
SB P30 ST	637 x 1,096 x 2,120
SB P30 STG PV elect.	637 x 1,096 x 2,120
SB P35 ST	637 x 1,096 x 2,120
SB P35 STG PV elect.	637 x 1,096 x 2,120
SB P40 ST	637 x 1,096 x 2,120
SB P40 STG PV elect.	637 x 1,096 x 2,120
SB P40 ST-FB	670 x 1,100 x 2,140
SB P40 STG-FB PV elect.	670 x 1,100 x 2,140
Gear drilling machines	
GB 50 MV	680 x 2,600 x 1,210
GB 50 MV Plus	680 x 2,600 x 1,210
SB P50 STG MV	740 x 2,220 x 1,320
GB 70 MV Plus	770 x 2,760 x 1,220

Outside dimensions drill presses without packaging
width x depth x height in mm

Series 10 Eco Plus, Turbo Drill, 10/13/15/18/23 Plus	
TB 10 Eco ▶Plus	400 x 248 x 460
Turbo Drill	320 x 520 x 820
TB 10 ▶Plus	320 x 520 x 820
TB 13 ▶Plus	400 x 520 x 850
SB 13 ▶Plus	420 x 540 x 1,780
TBZ 13 ▶Plus (without base)	320 x 485 x 1,027
TBZ 13 ▶Plus (with base)	350 x 480 x 800
TB 15 ▶Plus	400 x 520 x 850
SB 15 ▶Plus	420 x 540 x 1,780
TBZ 15 ▶Plus (without base)	320 x 485 x 1,027
TBZ 15 ▶Plus (with base)	350 x 480 x 800
TB 18 ▶Plus	355 x 705 x 1,065
SB 18 ▶Plus	355 x 705 x 1,825
TBZ 18 ▶Plus (without base)	320 x 485 x 1,045
TBZ 18 ▶Plus (with base)	350 x 480 x 800
TB 23 ▶Plus	550 x 750 x 1,250
SB 23 ▶Plus	550 x 750 x 1,800
TBZ 23 ▶Plus (without base)	550 x 750 x 1,250
TBZ 23 ▶Plus (with base)	550 x 750 x 2,050
Series E	
SB E3	460 x 740 x 1,800
SB E4	460 x 750 x 1,800
SB E5	460 x 740 x 1,800
Series M	
SB M3 ST	520 x 820 x 1,900
SB M3 ST MV	520 x 820 x 1,900
SB M4 ST	520 x 820 x 1,900
SB M4 ST MV	520 x 820 x 1,900
SB M5 ST	610 x 850 x 1,920
SB M5 ST MV	610 x 850 x 1,920
SB M3 ST-FB	420 x 830 x 1,900
Series P	
SB P30 ST	520 x 820 x 1,900
SB P30 STG PV elect.	520 x 820 x 1,900
SB P35 ST	610 x 850 x 1,920
SB P35 STG PV elect.	610 x 850 x 1,920
SB P40 ST	610 x 850 x 1,920
SB P40 STG PV elect.	610 x 850 x 1,920
SB P40 ST-FB	590 x 830 x 2,100
SB P40 STG-FB PV elect.	590 x 830 x 2,100
Gear drilling machines	
GB 50 MV	600 x 1,060 x 2,450
GB 50 MV Plus	600 x 1,060 x 2,450
SB P50 STG MV	550 x 950 x 2,170
GB 70 MV Plus	600 x 1,060 x 2,640

FLOTT
Machine Tools

High Quality –
made in Germany
since 1854.

FLOTT Products
Grinding Technology

Bench Grinders
TS 150 SW / TS 175 SW
TS 150 SD P / TS 175 SD P

Fig. above: TS 150 SW / TS 150 SD P
Fig. below: TS 175 SW / TS 175 SD P

FLOTT Machine Tools

By standard

- Smooth running and maintenance free high-quality motor
- Closed guards at both sides
- Rigid and adjustable tool support
- Equipped with two adjustable eye shields for safe work
- Can be used for grinding, sharpening and chamfering of all types of tools and metal profiles, etc.
- **Motor-circuit switch and low voltage release**

Machine supplied with

- Eye shields for both sides
- Connecting cable with earthed plug (SW models)
- Connecting cable with CEE-plug 16A (SD P models)
- One coarse and one fine abrasive disc

Technical Data		TS 150 SW	TS 175 SW
Wheel diameter	mm	150 x 25 x 32	175 x 25 x 32
Machine size unpacked	W x D x H mm	230 x 440 x 210	230 x 440 x 210
Machine size incl. packaging	W x D x H mm	260 x 450 x 250	260 x 450 x 250
Speed	rpm/min	2,800	2,800
Weight	kg	14	15
Suction nozzle Ø	mm	42	42
Motor single phase 230 V*	kW	0.52	0.52
Order Number		317.760	317.766

Accessories	TS 150 SW Order Number	TS 175 SW Order Number
Pedestal with water container Size 355 x 300 mm / Weight: 12 kg	350.435	350.435
Wall bracket	315.035	315.035
Grinding wheel corundum coarse	317.522	317.526
Grinding wheel corundum fine	317.523	317.527
Wheel dresser	350.101	350.101

Technical Data		TS 150 SD P	TS 175 SD P
Wheel diameter	mm	150 x 25 x 32	175 x 25 x 32
Machine size unpacked	W x D x H mm	230 x 440 x 210	230 x 440 x 210
Machine size incl. packaging	W x D x H mm	260 x 450 x 250	260 x 450 x 250
Speed	rpm/min	2,840	2,740
Weight	kg	14	15
Suction nozzle Ø	mm	42	42
Motor 3 phase 230 V/400 V*	kW	0.6	0.7
Order Number		317.765	317.761

Accessories	TS 150 SD P Order Number	TS 175 SD P Order Number
Pedestal with water container, Size 355 x 300 mm / Weight: 12 kg	350.435	350.435
Wall bracket	315.035	315.035
Grinding wheel corundum coarse	317.522	317.526
Grinding wheel corundum fine	317.523	317.527
Wheel dresser	350.101	350.101
Dust extractor MA 400 D	330.295	330.295
Electronic motor brake	350.040	350.040

Bench Grinders
TS 200 SD P
TS 250 SD P
TS 300 SD P

Fig.: TS 300 SD P with pedestal 350.436

FLOTT Machine Tools

By standard
TS 200 SD P / TS 250 SD P / TS 300 SD P

- Smooth running and maintenance free high-quality motor
- Closed guards at both sides
- Rigid and adjustable tool support
- Equipped with two adjustable eye shields for safe work
- Can be used for grinding, sharpening and chamfering of all types of tools and metal profiles, etc.
- **Motor-circuit switch and low voltage release**

Machine supplied with

- Eye shields for both sides
- Connecting cable with CEE-plug 16A
- One coarse and one fine abrasive disc
- Available with Emergency-off punch button and motor brake (optional in combination with machine stand and/ or exhaust system!)

Technical Data	TS 200 SD P	TS 250 SD P	TS 300 SD P
Wheel diameter mm	200 x 32 x 32	250 x 40 x 51	300 x 40 x 51
Machine size unpacked W x D x H mm	250 x 470 x 230	280 x 530 x 270	350 x 530 x 340
Machine size incl. packaging W x D x H mm	300 x 480 x 275	325 x 540 x 310	Palette
Speed rpm/min	2,550	1,400	1,250
Weight kg	20	32	40
Suction nozzle Ø mm	42	42	42
Motor 3 phase 230 V/400 V* kW	1.0	1.4	2.2
Order Number	317.762	317.763	317.764

Accessories	TS 200 SD P Order Number	TS 250 SD P Order Number	TS 300 SD P Order Number
Pedestal with water container Size 355 x 300 mm Weight: 12 kg	350.435	–	–
Pedestal with water container Size 420 x 520 mm Weight: 15 kg	–	350.436	350.436
Wall bracket	315.035	–	–
Sep. Grinding wheel corundum coarse	317.532	317.542	317.622
Sep. Grinding wheel corundum fine	317.533	317.543	317.624
Dressing Stone	350.101	350.101	350.101
MA 400	330.295	–	–
MA 600	–	330.080	330.080
with pedestal, emergency off push buttonand brake	317.774	317.775	317.776
with pedestal with exhaustion unit, emergency off push button and brake (see picture)	317.777	317.778	317.779

Available with Emergency-off punch button and motor brake (optional in combination with machine stand and/ or exhaust system!)

Fig.: TS 200 SD P with pedestal with exhaustion unit, emergency off push button and brake

Deburring Machine BEM 250 Plus

Fig.: BEM 250 plus

FLOTT Machine Tools

By standard

- Newly designed, silent-running and powerful brush deburring machine
- Robust 3-Phase Industrial AC Motor
- Adjustable Eye protection shield
- Easy to adjust tool rest (via infeed screw) when the deburring brush is worn out to adapt the working position
- Combined workpiece support for round material (prism) and Flat and rectangular profiles (sliding)
- Adjustable upper cover strip by clamping lever (for best adaptation to the material size)
- Connector Ø 80 mm with end cap (for easy connection to external exhaust systems)"
- Machine colour:
  -Machine Corpus RAL 7035
  -Side Cover RAL 7005

Scope of Delivery

- 1 set of machine feet (4 pcs) with adjusting screw
- Deburring brush (1 pc.); Dimensions: 250 x 60 / 0.35 mm Steel wire (corrugated)
- Connection cable with CEE plug
- Incl. Operating tool

Accessories

- Deburring round brush 250 x 60 mm, steel wire crimped 0.35 mm, with bore 50.8 mm, double keyway 13 x 7 mm
  Order No. 373.176
- Deburring round brush 250 x 60 mm, steel wire crimped 0.20 mm, with boring 50.8 mm, double keyway 13 x 7 mm (to be used for processing of for small and thin-walled pipes/ profiles)
  Order No. 373.177
- Deburring round brush 250 x 60 mm, steel wire crimped 0.50 mm, with bore 50.8 mm, double keyway 13 x 7 mm (to be used for processing of thick-walled pipes/ profiles)
  Order No. 373.178
- Deburring round brush 250 x 60 mm, steel wire (stainless) 0.35 mm, with bore 50.8 mm, double keyway 13 x 7 mm (to be used for processing of stainless steel made pipes/ profiles)
  Order No. 373.178
- **Other brushes for the processing of diverse materials - such as aluminum or anodized profiles - are available on request**

Technical Data		BEM 250 Plus
Steel brush diameter	mm	250
Steel brush width standard	mm	60
Bore Ø	mm	50.8
Material dimensions (max.)	mm	90 x 90
Working height	mm	930
Rotational speed	rpm/min	2,800/1,400
Power (kW)	kW	2.1/1.8
power connection	V/Hz	400/50
Weight	kg	85
Machine size (W x D x H)	mm	500 x 560 x 1,250
Order-No.		373.150

Deburring Machine BEM 250 Pro

Fig.: BEM 250 Pro

FLOTT Machine Tools

By standard

- High-performance deburring system for internal and external deburring of profiles and pipes in one operation (Process time: app. 3 sec.)
- Compact and robust machine design
- Powerful industrial geared 3-phase AC motor, frequency-controlled for best and easy setting of the required speed (600-2,700 rpm/ stepless)
- For deburring of pipes and profiles (maximum material dimension horizontal / vertical) 120 mm
- Easy to adjust work table height (lockable) corresponding to the material size
- Adjustable, lockable infeed (carriage guidance) of the de-burring brush to the working table by large-sized hand wheel (with locking function)
- Easy to remove chip drawer for dust residues
- Sturdy steel sheet machine housing with preparation (opening) for connection to an external extraction system
- Easy to access brushing area by foldable housing hoods for easy changing of brushes
- Machine colour:
  -Machine Corpus RAL 7035
  -Side Cover RAL 7005

Delivery Content

- 1 set of machine feet (4 pcs) with adjusting screw
- Deburring brush (1 set of three);
  Dimensions: 250 x 60 / 0.35 mm Steel wire (corrugated)
- Connection cable with CEE plug
- Incl. Operating tool

Accessories

- Deburring round brush 250 x 60 mm, steel wire crimped 0.35 mm, with bore 50.8 mm, double keyway 13 x 7 mm
  Order No. 373.176
- Deburring round brush 250 x 60 mm, steel wire crimped 0.20 mm, with bore 50.8 mm, double keyway 13 x 7 mm (to be used for processing of for small and thin-walled pipes/ profiles)
  Order No. 373.177
- Deburring round brush 250 x 60 mm, steel wire crimped 0.50 mm, with bore 50.8 mm, double keyway 13 x 7 mm (to be used for processing of thick-walled pipes/ profiles)
  Order No. 373.178
- Deburring round brush 250 x 60 mm, steel wire (stainless) 0.35 mm, with bore 50.8 mm, double keyway 13 x 7 mm (to be used for processing of stainless steel made pipes/ profiles)
  Order No. 373.178
- **Other brushes for the processing of various materials - such as aluminum or anodized profiles - are available on request**

Technical Data		BEM 250 Pro*
Steel brush diameter	mm	250 (3 pieces)
Steel brush width standard	mm	60
Bore Ø	mm	50.8
Working height	mm	1050
Rotational speed (stepless)	rpm/min	600-2,700
Power, frequency controlled	kW	3
power connection	V/Hz	400/50
Weight	kg	410
Machine size (W x D x H)	mm	680 x 1,200 x 1,380
Order-No.		373.155

*This deburring machine does meet all requirements according the norm DIN EN 55011:2011-04 [Classification A]. In case of a malfunction, please contact the manufacturer.

Pedestals with integrated dust extraction system MA 400 D / MA 600 D

FLOTT Machine Tools

Pedestals with integrated dust extraction system MA 400 D / MA 600 D

- MA 400 usable for machine types TS 150-200 SD P
- MA 600 usable for machine types TS 250-300 SD P

By standard

- Plug connection including electronically controlled on-off delay for the extraction system

Delivery Contents

- 1 pc. of suction hose
- Connecting cable with CEE-plug 16A

Technical Data		MA 400 D	MA 600 D
Motor 3 phase 230 V/ 400 Motor single phase 230 V	kW kW	– 1.1	0.55 –
Speed	1/min	1,600	2,800
Suction capacity	m^3/h	250	350
Suction hose	Ø mm	50	50
Dimensions baseplate	mm	355 x 300	420 x 520
Height	mm	820	840
Weight	kg	25	45
Order Number		330.295	330.080

**Only usable with loadable neutral conductor

Accessories MA 400/600 D	Order Number
Filter fabric for MA 400	330.289
1 pc. Suction hose Ø 50 mm (length: 1,300 mm)	330.086
Dust bag for MA 600	371.055

Special features	Order Number
Electronic machine braking system for greater machine safety when using bench grinding machines (only available in combination with pedestal and for models with 3 phase Motor)	350.040

ADDITIONAL OPTIONS FROM PAGE 87

Combined belt and wheel grinder TSB 250 P

FLOTT Machine Tools

Combined belt and wheel grinder P-series

- Powerful
- Belt grinding arm adjustable in height 0-90 °
- Maximum usable grinding area
- Belt fine adjustment
- Length end stop as workpiece guide
- Balanced and low-vibration
- Hose adaptor 500 mm dia on both sides
- Motor protection and low voltage switch
- Fixed end stop

By standard

- 1 standard grinding belt, grit 80 (brown)
- 1 standard grinding wheel,.grit 60
- Eye protection
- Cable with CEE plug

Accessories

- Grinding wheel 250x40x51 mm coarse (grit 36)
  Bestell-Nr. 371.542
- Grinding wheel 250x40x51 mm fine (grit 60)
  Bestell-Nr. 317.543
- Grinding belt 1300 x 75 mm brown (grit 40)
  Bestell-Nr. 316.042
- Grinding belt 1300 x 75 mm brown (grit 80)
  Bestell-Nr. 316.041
- Graphite support 80 x 350 mm
  Bestell-Nr. 316.045
- Machine pedestal with water container
  Bestell-Nr. 350.436
- Machine support with built-in exhaustion unit (MA 600)
  Bestell-Nr. 330.080

Technical Data		TSB 250 P
Grinding wheel size (grit 60)	mm	250 x 40 x 51
Machine size without packing material	B x T x H mm	600 x 320 x 700
Machine size packed	B x T x H mm	650 x 800 x 350
Speed	1/min	1,400
Weight	kg	35
Belt Speed	(m/s)	15
Belt Size	(mm)	1,300 x 75
Grit		80
Noise	dB (A)	78
Motor 3-phase 230 V/400 V*	kW	1.4
Machine size with grinding arm in vertical position	B x T x H mm	560 x 320 x 680
Order-No.		330.360

ADDITIONAL OPTIONS FROM PAGE 87

Belt Grinding Machines
BSM 75
BSM 75 A
BSM 75 A pol.

BSM 150
BSM 150 A
BSM 150 A pol.

BSM 75
BSM 75A
BSM 150A
to go
available for immediate delivery

Fig. above: BSM 75
Fig. below: BSM 150 A with exhaustion

FLOTT Machine Tools

FLOTT belt grinding machines were designed to fulfill the highest demands of our customers and to serve their professional needs best.

All new machines of the FLOTT BSM series have been continually developed to meet highest quality standards, to ensure the best ergonomics and ease of use. In addition, the machines are equipped with the latest safety features according to CE specifications and regulations.

Machine Features BSM 75 / BSM 75 A / BSM 75 A pol. et BSM 150 / BSM 150 A / BSM 150 A pol.

- High quality construction
- The drive roller is shaped spherical (as a result, the sanding belt centers itself automatically on the roller) and is fully vulcanized, made with a high proportion of natural rubber for longest life and vibration-free grinding
- Tool-free belt change: quick and easy change of the grinding belt
- Stepless height adjustment for best setting of the belt grinder
- Metal end stop for the best and safe guidance of workpieces when using the surface grinding area
- Optimized speed of the Grinding Belt reduces the risk of burning of the workpiece during processing
- Motor protection switch with CEE collar plug, incl. phase inverter for an easy connection to power network
- Motor Brake (except models BSM 75 A pol/ BSM 150 A pol) to meet latest work safety regulations
- Motor with 5 years Limited Warranty

Delivery Content

- Including Sanding Belt (grit 60)
- Dust Collecting Bag and suction hose (only models with built-in exhaust systems)

Technical Data		BSM 75	BSM 75 A	BSM 75 A/pol
Sanding belt length	mm	2,000	2,000	2,000
Sanding belt width	mm	75	75	75
Grinding surface area	mm	600	600	600
Belt speed	m/sec.	30	30	15/30
Colour	RAL	9007	9007	9007
Weight	kg	85	90	105
Motor 3 phase 400 V	kW	3.75	3.75	3.0/3.75
Extraction	m³/h	–	app. 630	app. 630
Exhaustion motor	kW	–	0.37	0.37
Machine size unpacked	W x D x H mm	1,100 x 550 x 1,035	1,100 x 550 x 1,035	1,100 x 550 x 1,035
Machine size incl. packaging	W x D x H mm	800 x 600 x 1,450	800 x 600 x 1,450	800 x 600 x 1,450
Order-No.		370.000	374.001	374.002

Technical Data		BSM 150	BSM 150 A	BSM 150 A/pol
Sanding belt length	mm	2,000	2,000	2,000
Sanding belt width	mm	150	150	150
Grinding surface area	mm	600	600	600
Belt speed	m/sec.	30	30	15/30
Colour	RAL	9007	9007	9007
Weight	kg	90	100	115
Motor 3 phase 400 V	kW	3.75	3.75	3.0/3.75
Extraction	m³/h	–	app. 630	app. 630
Exhaustion motor	kW	–	0.37	0.37
Machine size unpacked	W x D x H mm	1,100 x 550 x 1,035	1,100 x 550 x 1,035	1,100 x 550 x 1,035
Machine size incl. packaging	W x D x H mm	800 x 600 x 1,450	800 x 600 x 1,450	800 x 600 x 1,450
Order-No.		374.020	374.021	374.022

Accessories BSM 75+150 / A	Order-No.
Sep. Composite aluminum hose for exhaust system (Length: 1.50 m/delivered in two parts)	370.040
Graphite Base for BSM 75 – BSM 75 A/ pol.	370.042
Graphite Base for BSM 150 – BSM 150 A/ pol.	370.043
Sep. Dust bag for BSM 75 A – BSM 150 A/ pol.	370.055
Grinding belts	370.055
Spark Plate for BSM 75	374.071
Spark Plate for BSM 150	374.070
Connecting cable with CEE-plug (3m)	488.761

Accessories Grinding Technology

BSM 75 Models

▶ **Standard Abrasive Grinding Belts**
Size: 2,000 x 75 mm, Packaging Unit: 5 pc.
Corundum grit 40..... **Order No. 371.150**
Corundum grit 60..... **Order No. 371.151**
Corundum grit 80..... **Order No. 371.152**
Corundum grit 100..... **Order No. 371.153**
Corundum grit 120..... **Order No. 371.154**

▶ **Abrasive Grinding Belts for the processing of stainless steel and cast iron**
Size: 2,000 x 75 mm, Packaging Unit: 5 pc.
Corundum grit 40..... **Order No. 371.824**
Corundum grit 60..... **Order No. 371.825**
Corundum grit 80..... **Order No. 371.826**
Corundum grit 120..... **Order No. 371.827**

▶ **Graphite Layer base**
620 x 75 mm..... **Order No. 374.042**

BSM 150 Models

▶ **Standard Abrasive Grinding Belts**
Size: 2,000 x 150 mm, Packaging Unit: 5 pc.
Corundum grit 40..... **Order No. 371.125**
Corundum grit 60..... **Order No. 371.126**
Corundum grit 80..... **Order No. 371.127**
Corundum grit 100..... **Order No. 371.128**
Corundum grit 120..... **Order No. 371.129**

▶ **Abrasive Grinding Belts for the processing of stainless steel and cast iron**
Size: 2,000 x 150 mm, Packaging Unit: 5 pc.
Corundum grit 40..... **Order No. 371.828**
Corundum grit 60..... **Order No. 371.829**
Corundum grit 80..... **Order No. 371.830**
Corundum grit 120..... **Order No. 371.831**

▶ **Graphite Layer base**
620 x 150 mm..... **Order No. 374.043**

TSB 250 P

▶ **Standard Abrasive Grinding Belts**
Size: 1,300 x 75 mm
Corundum grit 40..... **Order No. 316.042**
Corundum grit 80..... **Order No. 316.041**

▶ **Graphite Layer base**
80 x 350 mm..... **Order No. 316.045**

FLOTT Machine Tools

Accessories/Spare Parts Grinding Technology

Wall Bracket

Order No. **315.035**

Eye Shields incl. holders (2 pcs.) for TS 150-TS 175

Order No. **315.311**

Eye Shields incl. holders (2 pcs.) for TS 200

Order No. **315.312**

Eye Shields incl. holders (2 pcs.) for TS 250-TS 300

Order No. **315.313**

Eye Shield (2 pc.) incl. holder

for BSM 75 models ..... **Order No. 370.565**
for BSM 150 models ..... **Order No. 370.566**

Contact rollers BSM Series (from year 2011 and later)

for BSM 75 models ..... **Order No. 370.585**
for BSM 150 models ..... **Order No. 370.586**

Dust collecting bag for BSM models with exhauster

Order No. **371.055**

Exhaust pipe for BSM models with exhauster

Order No. **374.040**

Please note: For faster processing of your spare requests, please have your machine number and machine type available

Dimensions Grinding Machines

Dimensions including packing
width x depth x height in mm

Double End Grinders	
TS 150 SW	260 x 450 x 250
TS 175 SW	260 x 450 x 250
TS 150 SD P	260 x 450 x 250
TS 175 SD P	260 x 450 x 250
TS 200 SD P	300 x 480 x 275
TS 250 SD P	325 x 540 x 310
TS 300 SD P	380 x 560 x 380
Combined belt and wheel grinder	
TSB 250 P	650 x 800 x 350
Deburring Machine	
BEM 250 Plus	-
BEM 250 Pro	-
Belt Grinding Machines	
BSM 75 / 75 A / 75 A pol	800 x 600 x 1,450
BSM 150 / 150 A / 150 A pol	800 x 600 x 1,450

Dimensions without packing
width x depth x height in mm

Double End Grinders	
TS 150 SW	230 x 440 x 210
TS 175 SW	230 x 440 x 210
TS 150 SD P	230 x 440 x 210
TS 175 SD P	230 x 440 x 210
TS 200 SD P	250 x 470 x 230
TS 250 SD P	280 x 530 x 270
TS 300 SD P	350 x 530 x 340
Combined belt and wheel grinder	
TSB 250 P	600 x 320 x 700
Deburring Machine	
BEM 250 Plus	500x560x1,250
BEM 250 Pro	680x1,200x1,380
Belt Grinding Machines	
BSM 75 / 75 A / 75 A pol	1,100 x 550 x 1,035
BSM 150 / 150 A / 150 A pol	1,100 x 550 x 1,035

FLOTT
Machine Tools

High Quality –
made in Germany
since 1854.

FLOTT Products
Metal Sawing Machinery

FLOTT Metal Band Saw HBS 225 MA

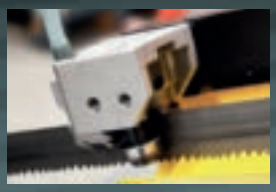

Sawing band guiding path made of carbid metal

Flottomat-BS
Precision Belt tension meter with dial indicator

Micro-spray system
For cutting pipes and profiles (optional)

Wormed gear system with motor
Recommended for industrial use

Running spandrel brush

Extension to roller conveyor
Left for roller conveyor type L (optional)

Roller conveyor
L-SR (Steel rollers) with roll widths: 330 mm
Weight load: 150 kg/m (optional)

By standard

- **Handy manual band sawing machine for highest professional demands with miter cutting ability from 0-60 degrees right/ 45 degrees left**
- Saw frame made of stable, highly torsion-resistant cast iron
- Robust worm geared motor
- High Precision Carbide Guiding System for the Sawing Band
- Running chip removal brush
- Mechanical sawing band tensioning system with electrical band monitoring
- High quality clamping system with trapezoidal threaded spindle
- Precise cutting accuracy over the complete cutting range
- Electric coolant pump
- Large round round table, rotating for mitre cutting with mitre scale
- Material stop 500 mm with scale
- Incl. Sawing band with Combi toothing 4/6
- Machine colours:
  - Saw frame RAL 7035
  - Machine corpus RAL 7005

Special equipment / Machine accessories

- Laser line marking for precise cutting
  Order No. 570.172
- Micro spraying system 24 V
  Order No. 570.170
- LED - Work light (cold white)
  Order No. 570.174
- Precision Belt tension meter with dial indicator (Flottomat-BS)
  Order No. 570.175
- Connector to Roller conveyor L-SR (Steel rollers), left, 330 mm wide (incl. Connection kit)
  Order No. 570.176
- Connector to Roller conveyor L-SR (Steel rollers), right, 330 mm wide (incl. Connection kit)
  Order No. 570.177
- Roller conveyor L-SR (Steel rollers), 330 mm wide, Basic version, Length: 2,000 mm , Weight load: 150 kg/mtr.
  Order No. 570.178
- Roller conveyor L-SR (Steel rollers), 330 mm wide, Basic version, Length: 3,000 mm , Weight load: 150 kg/mtr.
  Order No. 570.179
- Extension to roller conveyor L-SR (Steel rollers), Length: 2,000 mm, Weight load: 150 kg/ mtr.
  Order No. 570.180
- Extension to roller conveyor L-SR (Steel lrollers), Length: 3,000 mm, Weight load: 150 kg/ mtr.
  Order No. 570.181

FLOTT Machine Tools

Technical Data

Motor 3 Phase 400 V, pole reversable	1.1/1.5 kW
Saw Band Dimensions	2,720 x 27 x 0.9 mm
Flywheels Ø	300 mm
Cutting Speed	40/80 m/Min.
Clamping range of machine vice [max.]	275 mm
Working Height	978 mm
Machine Dimensions [W x D x H]	700 x 1,575 x 1,485 mm
Weight	370 kg

HBS 225 MA

Order No.	**570.000**

Sawing Range

	0°	45° R	45° L	60° R
○	230	190	170	120
▭	275 x 200	190 x 160	185 x 100	120 x 85
□	230 x 230	190 x 190	150 x 150	85 x 85

HSS Bi-Metall (M42) Sawing Bands

Differently setted saw blades available on request

HBS 225 MA	Dimensions in mm	Combi Toothing	Packing Unit (2 pcs.)
570.200	2,720 x 27 x 0.9	4/6	1
570.201	2,720 x 27 x 0.9	5/8	1
570.202	2,720 x 27 x 0.9	6/10	1
570.203	2,720 x 27 x 0.9	10/14	1

FOR MORE OPTIONS, PLEASE GO TO PAGE 111

Do you have any questions about available options and accessory articles, e.g. Roller conveyor systems? Please contact us. We will be happy to assist you!

FLOTT Metal Band Saw HBS 225 A

Flottomat-BS
Precision Belt tension meter with dial indicator

Precise guidance of the Sawing band
The sawing band is precisely guided by ground carbide plates

Sawing band breakage monitoring
The correct tension of the sawing band tension is constantly monitored for best cutting results and fast machine stop in case of breaking of the sawing band used

Round support machine table
The machine is equipped with a round support table, which rotates while miter cutting operations. As a result, there are no incisions in the bearing surface.

Machine Controls
All machine control elements are easy accessable from the front of the machine

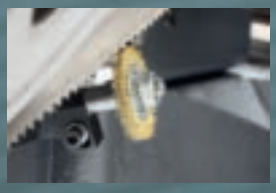

Powered chip removal brush

By standard

- New band sawing machine concept to meet workshop requirements best
- Torsionally stiff, robust sawframe made from casted iron
- Powered chip removal brush
- High-performance industrial worm geared motor
- Automatic shutdown after cutting process
- Mechanical sawing band tensioning system with electrical band break monitoring function
- Quick release and fully moveable vice
- Hydraulic Saw frame lowering with rapid traverse function (infinitely adjustable)
- High performance electric cooling pump
- Adjustable, high precision carbide guides for perfect alignment of the sawing band, ground
- Large-sized round support table, co-rotating for mitre cutting, Scale for mitre cutting facing the operator
- Easy to remove chip collecting tray
- Material end stop 500 mm with scale
- Sawing band with Combi-Toothing 4/6 included
- Machine colours:
  - Saw frame RAL 7035
  - Machine corpus RAL 7005

Special equipment / Machine accessories

- Laser line marking for precise cutting
  Order No. 570172
- Micro spraying system 24 V
  Order No. 570170
- LED - Work Light
  Order No. 570174
- Precision Belt tension meter with dial indicator (Flottomat-BS)
  Order No. 570.175
- Connector to Roller conveyor L-SR (Steel rollers), left , 330 mm wide (incl. Connection kit)
  Order No. 570.176
- Connector to Roller conveyor L-SR (Steel rollers), right, 330 mm wide (incl. Connection kit)
  Order No. 570.177
- Roller conveyor L-SR (Steel rollers), 330 mm wide, Basic version, Length: 2,000 mm , Weight load: 150 kg/mtr.
  Order No. 570.178
- Roller conveyor L-SR (Steel rollers), 330 mm wide, Basic version, Length: 3,000 mm , Weight load: 150 kg/mtr.
  Order No. 570.179
- Extension to roller conveyor L-SR (Steel rollers), Length: 2,000 mm, Weight load: 150 kg/ mtr.
  Order No. 570.180
- Extension to roller conveyor L-SR (Steel lrollers), Length: 3,000 mm, Weight load: 150 kg/ mtr.
  Order No. 570.181

FLOTT Machine Tools

Technical Data

Motor 3 Phase 400 V, pole reversable	1.1/1.5 kW
Saw Band Dimensions	2,720 x 27 x 0.9 mm
Flywheels Ø	300 mm
Cutting Speed	40/80 m/Min.
Clamping range of machine vice [max.]	275 mm
Working Height	978 mm
Machine Dimensions [W x D x H]	1,150 x 1,588 x 1,477 mm
Weight	370 kg

HBS 225 A

Order No.	**570.050**

Sawing Range

	0°	45° R	45° L	60° R
○	230	190	170	120
▭	275 x 180	190 x 150	185 x 100	120 x 100
□	230 x 230	180 x 180	150 x 150	100 x 100

HSS Bi-Metall (M42) Sawing Bands

Differently setted saw blades available on request

HBS 225 MA	Dimensions in mm	Combi Toothing	Packing Unit (2 pcs.)
570.200	2,720 x 27 x 0.9	4/6	1
570.201	2,720 x 27 x 0.9	5/8	1
570.202	2,720 x 27 x 0.9	6/10	1
570.203	2,720 x 27 x 0.9	10/14	1

FOR MORE OPTIONS, PLEASE GO TO PAGE 111

Do you have any questions about available options and accessory articles, e.g. Roller conveyor systems? Please contact us. We will be happy to assist you!

FLOTT Metal Band Saw HBS 250 A

Neatly arranged Control panel

Flottomat-BS
Precision Belt tension meter with dial indicator

Spray gun for chip cleaning (optional)

Roller conveyor with vertical rollers (optional)

Digital Material end stop (optional)

By standard

- **High-performance band sawing machine with hydraulic lowering of the Saw frame (by control valve) For miter cutting from 0-60 degrees right up to 45 degrees left**
- Saw frame made of stable cast iron (highly torsionally rigid)
- Feeding controlled by weight of the saw frame
- High-quality industrial three-phase motor (with helical gear unit) to meet all requirements (frequency-controlled)
- Running chip removal brush
- Adjustable, high precision carbide guides for perfect alignment of the sawing band, ground
- Quick release machine vice, moveable
- Large-sized round support table, co-rotating for mitre cutting with predefined cutting channel, Scale for mitre cutting facing the operator
- Manual setting of mitre Cutting and Clamping parameters
- Easy to remove chip collecting tray
- High performance electric cooling pump
- Material end stop 500 mm with Scale
- incl. Sawing band with Combi Toothing 4/6
- Machine Colours:
  - Saw frame RAL 7035
  - Machine Corpus RAL 7005

Special equipment / Machine accessories

- Spray gun for chip cleaning
  Order No. 570110
- Laser line marking for precise cutting
  Order No. 570.172
- Micro spraying system 24 V
  Order No. 570.170
- LED - Work Light
  Order No. 570.174
- Precision Belt tension meter with dial indicator (Flottomat-BS)
  Order No. 570.175
- Connector to Roller conveyor L-SR (Steel rollers), left , 330 mm wide (incl. Connection kit)
  Order No. 570.281
- Connector to Roller conveyor L-SR (Steel rollers), right, 330 mm wide (incl. Connection kit)
  Order No. 570.282
- Roller conveyor L-SR (Steel rollers), 330 mm wide, Basic version, Length: 2,000 mm, Weight load: 150 kg/ mtr.
  Order No. 570.178
- Roller conveyor L-SR (Steel rollers), 330 mm wide, Basic version, Length: 3,000 mm, Weight load: 150 kg/ mtr.
  Order No. 570.179
- Extension to roller conveyor L-SR (Steel rollers), Length: 2,000 mm, Weight load: 150 kg/ mtr.
  Order No. 570.180
- Extension to roller conveyor L-SR (Steel lrollers), Length: 3,000 mm, Weight load: 150 kg/ mtr.
  Order No. 570.181

FLOTT Machine Tools

Technical Data

Motor 3 Phase 400 V, frequency converted	1.5 kW
Saw Band Dimensions	2,910 x 27 x 0.9 mm
Flywheels Ø	325 mm
Cutting Speed	20-120 m/Min.
Clamping range of machine vice [max.]	320 mm
Working Height	760 mm
Machine Dimensions [W x D x H]	1,480 x 1,700 x 2,000 mm
Weight	390 kg

HBS 250 A

Order No.	**570.005**

Sawing Range

	0°	45° R	45° L	60° R
○	250	220	180	130
▭	320 x 190	220 x 120	200 x 100	130 x 100
□	240 x 240	210 x 210	160 x 160	100 x 100

HSS Bi-Metall (M42) Sawing Bands

Differently setted saw blades available on request

HBS 250 A	Dimensions in mm	Combi Toothing	Packing Unit (2 pcs.)
570.206	2,910 x 27 x 0.9	2/3	1
570.207	2,910 x 27 x 0.9	3/4	1
570.208	2,910 x 27 x 0.9	4/6	1
570.209	2,910 x 27 x 0.9	5/8	1
570.210	2,910 x 27 x 0.9	10/14	1

FOR MORE OPTIONS, PLEASE GO TO PAGE 111

Do you have any questions about available options and accessory articles, e.g. Roller conveyor systems? Please contact us. We will be happy to assist you!

*This metal band saw does meet all requirements according the norm DIN EN 55011:2011-04 [Classification A]. In case of a malfunction, please contact the manufacturer.

FLOTT Metal Band Saw HBS 250 HA

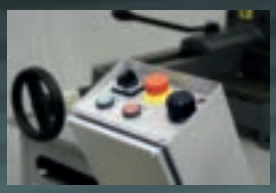

Neatly arranged Control panel

Mitre Cutting Indicator

LED illumination of the work area (optional)

Spray gun for chip cleaning (optional)

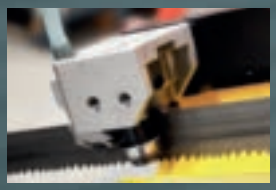

Precise guidance of the Sawing band
The sawing band is precisely guided by carbide plates

Laser line supported cutting
The Laser Line Marking of the precise cutting postion of the sawing band allows fast and accurate positioning and alignment of the workpiece to be cut. (optional)

Flottomat-BS
Precision Belt tension meter with dial indicator

By standard

- Fully hydraulic lifting and lowering of the saw frame
- Hydraulic opening and closing of the machine vise
- Machine shutdown after end of cutting, autom. return of the saw arm to starting position
- Torsionally rigid saw frame made of cast iron (multi ribbed layout)
- Hydraulic short stroke cylinder for clamping jaws
- Adjustable, high precision carbide guides for perfect alignment of the sawing band, ground
- High performance electric cooling pump
- Manual setting of Sawing Band tension with display, incl. electric monitoring of the Sawing Band blade function and cutting pressure
- Hydraulic vice (opening and closing)
- Running chip removal brush
- Large-sized round support table, co-rotating for mitre cutting with predefined cutting channel, manual setting of mitre cutting by Scale
- Material end stop 500 mm with scale
- Sawing band with Combi-Toothing 4/6 included
- Machine Colours:
  - Saw frame RAL 7035
  - Machine Corpus RAL 7005

Special equipment / Machine accessories

- Clamping pressure regulation (vice)
  Order No. 570.168
- Laser line marking for precise cutting
  Order No. 570.172
- Micro spraying system 24 V
  Order No. 570.254
- LED -Work Light
  Order No. 570.174
- Precision Belt tension meter with dial indicator (Flottomat-BS)
  Order No. 570.175
- Roller conveyor L-SR (Steel rollers), left , 330 mm wide (incl. Connection kit)
  Order No. 570.281
- Roller conveyor L-SR (Steel rollers), right, 330 mm wide (incl. Connection kit)
  Order No. 570.282
- Roller conveyor L-SR (Steel rollers), 330 mm wide, Basic version, Length: 2,000 mm , Weight load: 150 kg/mtr.
  Order No. 570.178
- Roller conveyor L-SR (Steel rollers), 330 mm wide, Basic version, Length: 3,000 mm , Weight load: 150 kg/mtr.
  Order No. 570.179
- Extension to roller conveyor L-SR (Steel rollers), Length: 2,000 mm, Weight load: 150 kg/ mtr.
  Order No. 570.180
- Extension to roller conveyor L-SR (Steel lrollers), Length: 3,000 mm, Weight load: 150 kg/ mtr.
  Order No. 570.181

FLOTT Machine Tools

Technical Data

Motor 3 Phase 400 V, frequency converted	1.5 kW
Saw Band Dimensions	2,910 x 27 x 0.9 mm
Flywheels Ø	325 mm
Cutting Speed	20-120 m/Min.
Clamping range of machine vice [max.]	320 mm
Working Height	760 mm
Machine Dimensions [W x D x H]	1,480 x 1,700 x 2,000 mm
Weight	420 kg

HBS 250 HA

Order No.	**570.010**

Sawing Range

	0°	45° R	45° L	60° R
○	250	220	180	130
▭	320 x 190	220 x 120	200 x 100	130 x 100
□	240 x 240	210 x 210	160 x 160	100 x 100

HSS Bi-Metall (M42) Sawing Bands

Differently setted saw blades available on request

HBS 250 HA	Dimensions in mm	Combi Toothing	Packing Unit (2 pcs.)
570.206	2,910 x 27 x 0.9	2/3	1
570.207	2,910 x 27 x 0.9	3/4	1
570.208	2,910 x 27 x 0.9	4/6	1
570.209	2,910 x 27 x 0.9	5/8	1
570.210	2,910 x 27 x 0.9	10/14	1

FOR MORE OPTIONS, PLEASE GO TO PAGE 111

Do you have any questions about available options and accessory articles, e.g. Roller conveyor systems? Please contact us. We will be happy to assist you!

*This metal band saw does meet all requirements according the norm DIN EN 55011:2011-04 [Classification A]. In case of a malfunction, please contact the manufacturer.

FLOTT Metal Band Saw HBS 350 HA

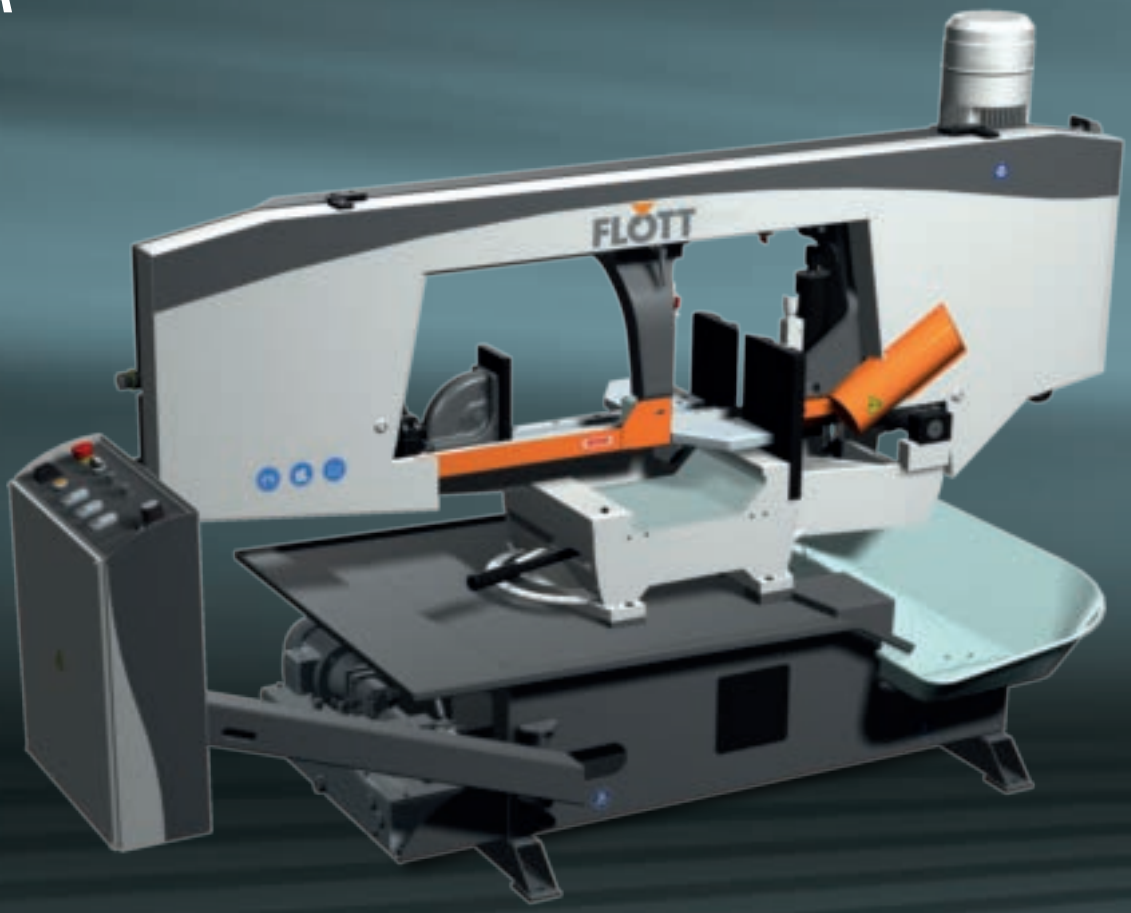

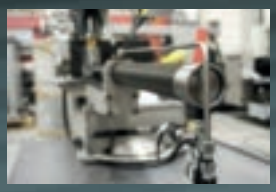

Clambing devices equipped with lifting cylinders

Spray gun for chip cleaning (optional)

Clamping pressure control of machine vises
The pressure regulation of the vises can be installed at the main vise and as well at the feeding vise (by standard)

Bundle clamping device
Allows the clamping of multiple layers and bundles by an additional vertical clamping unit (optional)

Band tension indicator
To check the optimal sawing blade tension even during operation of the machine (optional)

Rollenbahn M-SR
With vertical steel rollers to prevent the rolling off the conveyor of pipes and other round workpieces (optional)

By standard

- **Newly ergonomical and appealing machine design with an highly robust machine frame (welded construction) with miter cutting ability from 0-60 degrees right + left**
- Sturdy, low-vibration frame construction/ saw arm with plain bearing seatings
- Neaty control panel facing the operator
- Simple to use, easy to understand machine control
- Adjustable, grounded high precision carbide guides for perfect alignment of the sawing band to meet highest demands regarding cutting accuracy (< 0.1 mm).
- Synchronously driven chip removal brush
- Semi-automatic sawing cycle: Fully hydraulic
- Hydraulic cutting feed including automatic cutting pressure regulation
- Mitre cutting adjustment and clamping (manual)
- Hydraulic lifting cylinder for tensioning rod (pull-down version) with floating clamping system
- Clamping pressure regulation for machine vice
- Sawing Band tension- and sawing band breakage monitoring
- Installed coolant supply system with 30 l tank capacity
- Easy to remove chip collecting trays
- LED-Work Light in "Cold White"
- Digital mitre Indication. The precise mitre display shows the adjusted angle from 0.1 °"
- incl. Sawing band with Combi Toothing 4/6
- Machine Colours:
  - Saw frame RAL 7035
  - Machine Corpus RAL 7005

Special equipment / Machine accessories

- Spray gun for chip cleaning
  Order No. 570.110
- Laser line marking for precise cutting
  Order No. 570.109
- Hydraulic Band tension indicator
  Order No. 570.065
- Hydraulic Bundle clamping device
- Allows the clamping of multiple layers and bundles by an additional vertical clamping unit
  Order No. 570.107
- Material end stop 500 mm (Scale)
  Order No. 570.268
- Connection to Roller conveyor T-SR (Steel rollers), left , 540 mm wide (incl. Connection kit)
  Order No. 570.111
- Connection to Roller conveyor T-SR (Steel rollers), right, 540 mm wide (incl. Connection kit)
  Order No. 570.112
- Roller conveyor T-SR (Steel rollers), 540 mm wide, Basic version, Length: 2,000 mm , Weight load: 600 kg/mtr.
  Order No. 570.113
- Roller conveyor T-SR (Steel rollers), 5400 mm wide, Basic version, Length: 3,000 mm , Weight load: 600 kg/mtr.
  Order No. 570.114
- Extension to roller conveyor T-SR (Steel rollers), Length: 2,000 mm, Weight load: 600 kg/ mtr.
  Order No. 570.115
- Extension to roller conveyor T-SR (Steel lrollers), Length: 3,000 mm, Weight load: 600 kg/ mtr.
  Order No. 570.116

FLOTT Machine Tools

Technical Data

Motor 3 Phase 400 V, frequency converted	3 kW
Saw Band Dimensions	4,780 x 34 x 1.1 mm
Flywheels Ø	450 mm
Cutting Speed	20-120 m/Min.
Clamping range of machine vice [max.]	510 mm
Clamping	4000-7850 N
Working Height	761 mm
Machine Dimensions [W x D x H]	2,568 x 1,070 x 1,500 mm
Weight	710 kg

HBS 350 HA

Order No.	**570.015**

Sawing Range

	0°	45° R	45° L	60° R	60° L
○	350	350	350	250	270
▭	510 x 350	400 x 100	415 x 100	260 x 100	280 x 100
□	350 x 350	340 x 340	350 x 350	240 x 240	260 x 260

HSS Bi-Metall (M42) Sawing Bands

Differently setted saw blades available on request

HBS 350 HA	Dimensions in mm	Combi Toothing	Packing Unit (2 pcs.)
570.213	4,780 x 34 x 1.1	2/3	1
570.214	4,780 x 34 x 1.1	3/4	1
570.215	4,780 x 34 x 1.1	4/6	1
570.216	4,780 x 34 x 1.1	5/8	1
570.217	4,780 x 34 x 1.1	10/14	1

FOR MORE OPTIONS, PLEASE GO TO PAGE 111

Do you have any questions about available options and accessory articles, e.g. Roller conveyor systems? Please contact us. We will be happy to assist you!

*This metal band saw does meet all requirements according the norm DIN EN 55011:2011-04 [Classification A]. In case of a malfunction, please contact the manufacturer.

FLOTT Metal Band Saw HBS 450 HA

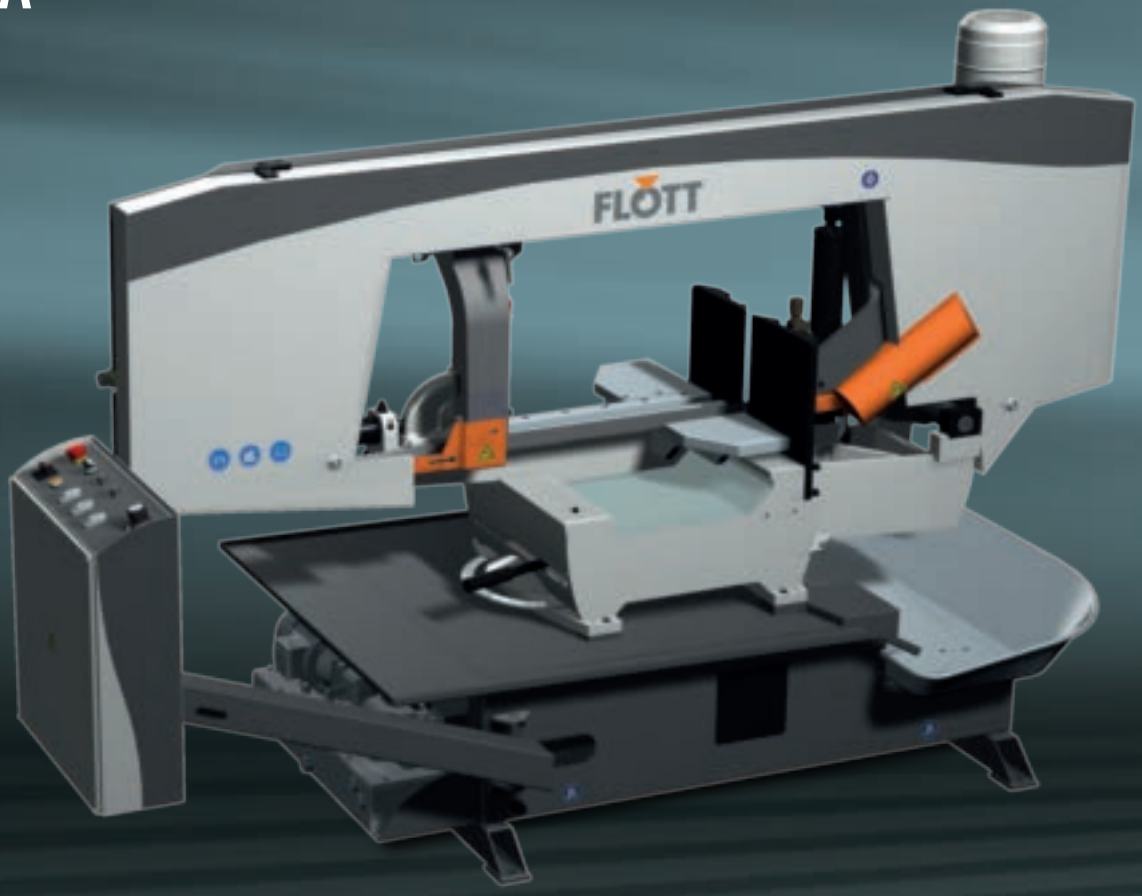

Clambing devices equipped with lifting cylinders

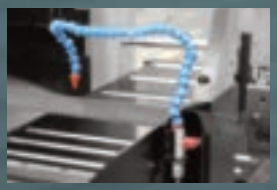

Additional 3rd. coolant supply (optional)

Laser line supported cutting
The Laser Line Marking of the precise cutting postion of the sawing band allows fast and accurate positioning and alignment of the workpiece to be cut. (optional)

Bundle clamping device
Allows the clamping of multiple layers and bundles by an additional vertical clamping unit

By standard

- **Newly ergonomical and appealing machine design with an highly robust machine frame (welded construction) with miter cutting ability from 0-60 degrees right + left**
- Sturdy, low-vibration frame construction/ saw arm with plain bearing seatings
- Neaty control panel facing the operator
- Simple to use, easy to understand machine control
- Adjustable, grounded high precision carbide guides for perfect alignment of the sawing band to meet highest demands regarding cutting accuracy (< 0.1 mm).
- Synchronously driven chip removal brush
- Semi-automatic sawing cycle: Fully hydraulic
- Hydraulic cutting feed including automatic cutting pressure regulation
- Mitre cutting adjustment and clamping (manual)
- Hydraulic lifting cylinder for tensioning rod (pull-down version) with floating clamping system
- Clamping pressure regulation for machine vice
- Sawing Band tension- and sawing band breakage monitoring
- Easy to remove chip collecting trays
- Installed coolant supply system with 30 l tank capacity
- LED-Work Light in "Cold White"
- Digital mitre Indication. The precise mitre display shows the adjusted angle from 0.1 °"
- incl. Sawing band with Combi Toothing 4/6
- Machine Colours:
  - Saw frame RAL 7035
  - Machine Corpus RAL 7005

Special equipment / Machine accessories

- Spray gun for chip cleaning
  Order No. 570.109
- Laser line marking for precise cutting
  Order No. 570.065
- Hydraulic Band tension indicator
  Order No. 570.269
- Hydraulic Bundle clamping device. Allows the clamping of multiple layers and bundles by an additional vertical clamping unit
  Order No. 570.066
- Connection to Roller conveyor T-SR (Steel rollers), left , 640 mm wide (incl. Connection kit)
  Order No. 570.067
- Connection to Roller conveyor T-SR (Steel rollers), right, 640 mm wide (incl. Connection kit)
  Order No. 570.068
- Roller conveyor T-SR (Steel rollers), 640 mm wide, Basic version, Length: 2,000 mm , Weight load: 600 kg/mtr.
  Order No. 570.069
- Roller conveyor T-SR (Steel rollers), 640 mm wide, Basic version, Length: 3,000 mm , Weight load: 600 kg/mtr.
  Order No. 570.070
- Extension to roller conveyor T-SR (Steel rollers), Length: 2,000 mm, Weight load: 600 kg/ mtr.
  Order No. 570.071
- Extension to roller conveyor T-SR (Steel rollers), Length: 3,000 mm, Weight load: 600 kg/ mtr.
  Order No. 570.080

FLOTT Machine Tools

Technical Data

Motor 3 Phase 400 V, frequency converted	3 kW
Saw Band Dimensions	5,200 x 34 x 1.1 mm
Flywheels Ø	480 mm
Cutting Speed	20-120 m/Min.
Clamping range of machine vice [max.]	610 mm
Working Height	781 mm
Machine Dimensions [W x D x H]	2,780 x 1,440 x 1,560 mm
Weight	800 kg

HBS 450 HA

Order No.	**570.020**

Sawing Range

	0°	45° R	45° L	60° R	60° L
○	450	450	450	310	340
▭	610 x 450	480 x 100	500 x 100	320 x 100	350 x 100
□	450 x 450	420 x 420	420 x 420	300 x 300	320 x 320

HSS Bi-Metall (M42) Sawing Bands

Differently setted saw blades available on request

HBS 450 HA	Dimensions in mm	Combi Toothing	Packing Unit (2 pcs.)
570.220	5,200 x 34 x 1.1	2/3	1
570.221	5,200 x 34 x 1.1	3/4	1
570.222	5,200 x 34 x 1.1	4/6	1
570.223	5,200 x 34 x 1.1	5/8	1

FOR MORE OPTIONS, PLEASE GO TO PAGE 111

Do you have any questions about available options and accessory articles, e.g. Roller conveyor systems? Please contact us. We will be happy to assist you!

*This metal band saw does meet all requirements according the norm DIN EN 55011:2011-04 [Classification A]. In case of a malfunction, please contact the manufacturer.

FLOTT Metal Band Saw
HBS 350 ANC

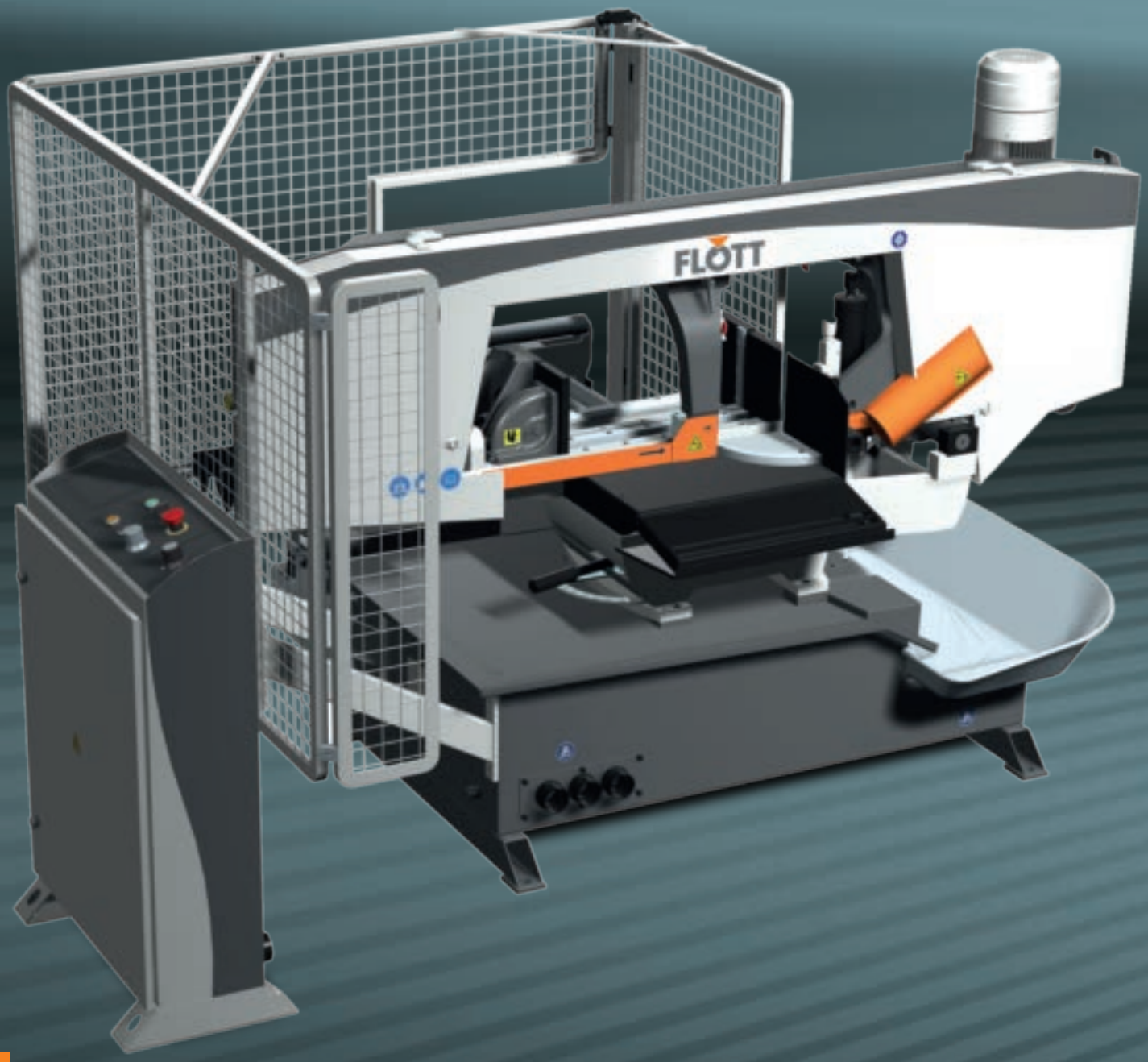

By standard

- **The perfect combination of semi-automatic / automatic high-performance band saw incl. miter cutting ability from 0-60 degrees right**
- **Please note:** Automatic operation of the machine only at 0 degrees (according to cutting specifications)/ Miter Cutting in semi-automatic modus only!
- Highly sophisticated machine design
- Robust Sawing frame with spherical bearings, welded
- Lifting height limitation of the saw frame by rotary encoder
- Freely positionable machine control unit, equipped with high resolution LCD panel
- Integrated material feeding (with sliding bearings) in automatic operation mode
- Feeding length (single stroke) up to 600 mm
- Feeding via hydraulic cylinders
- Numbers of Cutting cycles (automatic mode): 999 (max.)
- Smallest diameter to be sawn is 10 mm
- Residual length of sawing material due to clamping: 60 mm (min.)
- **Please note**: Size limitation of workpiece/smallest workpiece to be cut [L x H] is: 15 x 5 mm
- Machine vices equipped with full stroke hydraulic cylinders (pull-down version)
- Cutting feed including automatic cutting pressure regulation
- Dual-pump hydraulic unit
- Adjustable, grounded high precision carbide guides for perfect alignment of the sawing band to meet highest demands regarding cutting accuracy
- Clamping pressure regulation for vices
- Floating vise
- Sawing Band vice- and sawing band breakage monitoring
- Easy to remove chip collecting trays
- Installed coolant supply system with 30 l tank capacity
- LED-Work Light in "Cold White"
- incl. Sawing band with Combi Toothing 4/6
- Machine Colours:
  - Saw frame RAL 7035
  - Machine Corpus RAL 7005

Special equipment / Machine accessories

- Hydraulic Bundle clamping device
  Order No. 570.064
- Hydraulic Band tension indicator
  Order No. 570.065
- Micro spraying system 24 V
  Order No. 570.254
- Laser line supported cutting
  Order No. 570.109
- Connection to Roller conveyor T-SR (Steel rollers), left , (incl. Connection kit)
  Order No. 570.284
- Connection to Roller conveyor T-SR (Steel rollers), right, 540 mm wide (incl. Connection kit)
  Order No. 570.112
- Roller conveyor T-SR (Steel rollers), 540 mm wide, Basic version, Length: 2,000 mm , Weight load: 600 kg/mtr.
  Order No. 570.113
- Roller conveyor T-SR (Steel rollers), 540 mm wide, Basic version, Length: 3,000 mm , Weight load: 600 kg/mtr.
  Order No. 570.114

FLOTT Machine Tools

Technical Data

Motor 3 Phase 400 V, frequency converted	3 kW
Saw Band Dimensions	4,780 x 34 x 1.1 mm
Flywheels Ø	450 mm
Cutting Speed	20-120 m/Min.
Clamping range of machine vice [max.]	510 mm
Working Height	761 mm
Machine Dimensions [W x D x H]	2,440 x 2,880 x 1,540 mm
Weight	950 kg

HBS 350 ANC

Order No.	**570.025**

Sawing Range

	0°	45° R	60° R
○	350	350	250
▭	510 x 350	400 x 100	260 x 100
□	350 x 350	340 x 340	240 x 240

HSS Bi-Metall (M42) Sawing Bands

Differently setted saw blades available on request

HBS 350 ANC	Dimensions in mm	Combi Toothing	Packing Unit (2 pcs.)
570.213	4,780 x 34 x 1.1	2/3	1
570.214	4,780 x 34 x 1.1	3/4	1
570.215	4,780 x 34 x 1.1	4/6	1
570.216	4,780 x 34 x 1.1	5/8	1
570.217	4,780 x 34 x 1.1	10/14	1

FOR MORE OPTIONS, PLEASE GO TO PAGE 111

Do you have any questions about available options and accessory articles, e.g. Roller conveyor systems? Please contact us. We will be happy to assist you!

- Extension to roller conveyor T-SR (Steel rollers), Length: 2,000 mm, Weight load: 600 kg/ mtr.
  Order No. 570.115
- Extension to roller conveyor T-SR (Steel lrollers), Length: 3,000 mm, Weight load: 600 kg/ mtr.
  Order No. 570.116

*This metal band saw does meet all requirements according the norm DIN EN 55011:2011-04 [Classification A]. In case of a malfunction, please contact the manufacturer.

FLOTT Metal Band Saw HBS 350 SANC

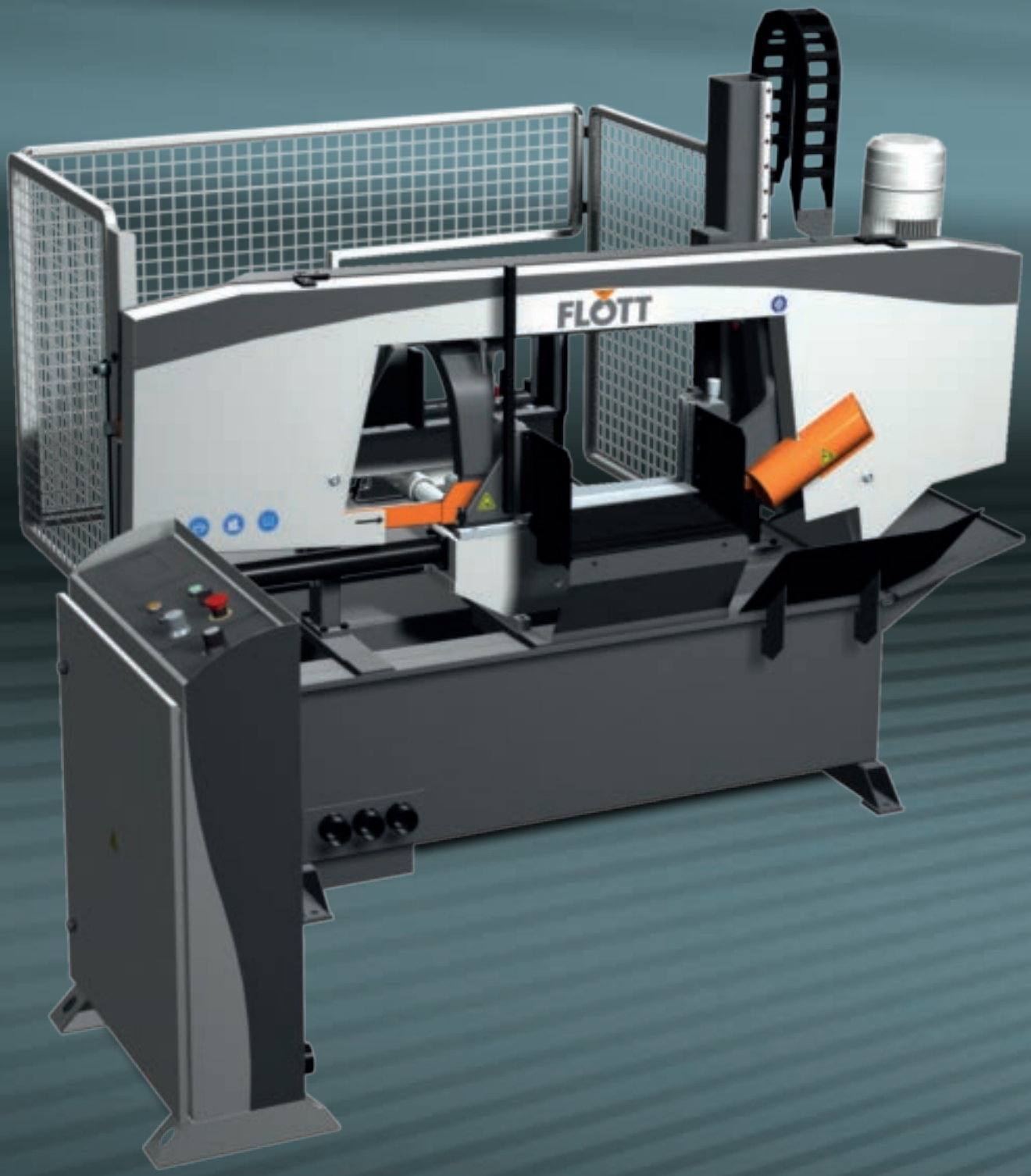

By standard

- 2-column fully-automatic horizontal band sawing machine for highly demanding industrial use
- The saw frame uses two robust columns and is guided on one side - free of play - in a pretensioned linear guide.
- 3-sided precision hard-metal guiding system of the sawing band to achieve best cutting results
- Sawing Band tension- and sawing band breakage monitoring
- Synchronously driven chip removal brush
- Fully hydraulic sawing:
  - Feeding of material (via plain bearing)
  - Feed length (single stroke) 600 mm (max.)
  - feeding via hydraulic cylinder
- Numbers of Cutting cycles (automatic mode): 999 (max.)
- Smallest diameter to be sawn is 10 mm
- Residual length of sawing material due to clamping: 20 mm (min.)
- **Please note:** Size limitation of workpiece/ smallest workpiece to be cut [L x H] is: 10 x 5 mm
- Hydraulic cutting feed of the sawing arm (including automatic cutting pressure regulation) Lifting height of Sawing frame: Limitation by limit switch
- Freely positionable by machine control unit with large display, easy to use with step-by-step programming
- Machine vices equipped with full stroke hydraulic cylinders
- Dual-pump hydraulic unit
- Hydraulic Bundle clamping device. Allows the clamping of multiple layers and bundles by an additional vertical clamping unit
- Clamping pressure regulation for splitted vice, floating
- Installed coolant supply system with 45 l tank capacity
- LED-Work Light in "Cold White"
- Automatic chip conveyor located under the cutting area
- incl. Sawing band with Combi Toothing 4/6
- Machine Colours:
  - Saw frame RAL 7035
  - Machine Corpus RAL 7005"

Special equipment / Machine accessories

- Deviation control of the sawing band
  Order No. 570.062
- Indicator for Sawing feed speed
  Order No. 570.063
- Micro spraying system 230 V
  Order No. 570.254
- Additional 3rd. coolant supply
  Order No. 570.173
- Spray gun for chip cleaning
  Order No. 570.110
- Hydraulic Band tension indicator
  Order No. 570.065
- Connection to Roller conveyor X-SR (Steel rollers), left , 450 mm wide (incl. Connection kit)
  Order No. 570.255
- Roller conveyor X-SR (Steel rollers x 3 pcs.), 450 mm wide, Basic version, Length: 2,000 mm , Weight load: 1,500 kg/mtr.
  Order No. 570.256
- Roller conveyor X-SR (Steel rollers x 3 pcs.), 450 mm wide, Basic version, Length: 3,000 mm , Weight load: 1,500 kg/mtr.
  Order No. 570.258
- Extension to Roller Conveyor X-SR (Steel rollers x 2 pcs.), Length: 2,000 mm, Weight load: 1,500 kg/ mtr.
  Order No. 570.260
- Extension to Roller Conveyor X-SR (Steel rollers x 3 pcs.), Length: 3,000 mm, Weight load: 1,500 kg/ mtr.
  Order No. 570.262

FLOTT Machine Tools

Technical Data

Motor 3 Phase 400 V, frequency converted	3 kW
Saw Band Dimensions	4,780 x 34 x 1.1 mm
Flywheels Ø	450 mm
Cutting Speed	20-120 m/Min.
Clamping range of machine vice [max.]	420 mm
Working Height	780 mm
Machine Dimensions [W x D x H]	2,300 x 2,050 x 2,000 mm
Weight	1,200 kg

HBS 350 SANC

Order No.	**570.030**

Sawing Range

	0°
○	350
▭	420 x 350
□	350 x 350

HSS Bi-Metall (M42) Sawing Bands

Differently setted saw blades available on request

HBS 350 SANC	Dimensions in mm	Combi Toothing	Packing Unit (2 pcs.)
570.213	4,780 x 34 x 1.1	2/3	1
570.214	4,780 x 34 x 1.1	3/4	1
570.215	4,780 x 34 x 1.1	4/6	1
570.216	4,780 x 34 x 1.1	5/8	1
570.217	4,780 x 34 x 1.1	10/14	1

FOR MORE OPTIONS, PLEASE GO TO PAGE 111

Do you have any questions about available options and accessory articles, e.g. Roller conveyor systems? Please contact us. We will be happy to assist you!

*This metal band saw does meet all requirements according the norm DIN EN 55011:2011-04 [Classification A]. In case of a malfunction, please contact the manufacturer.

FLOTT Metal Band Saw HBS 450 SANC

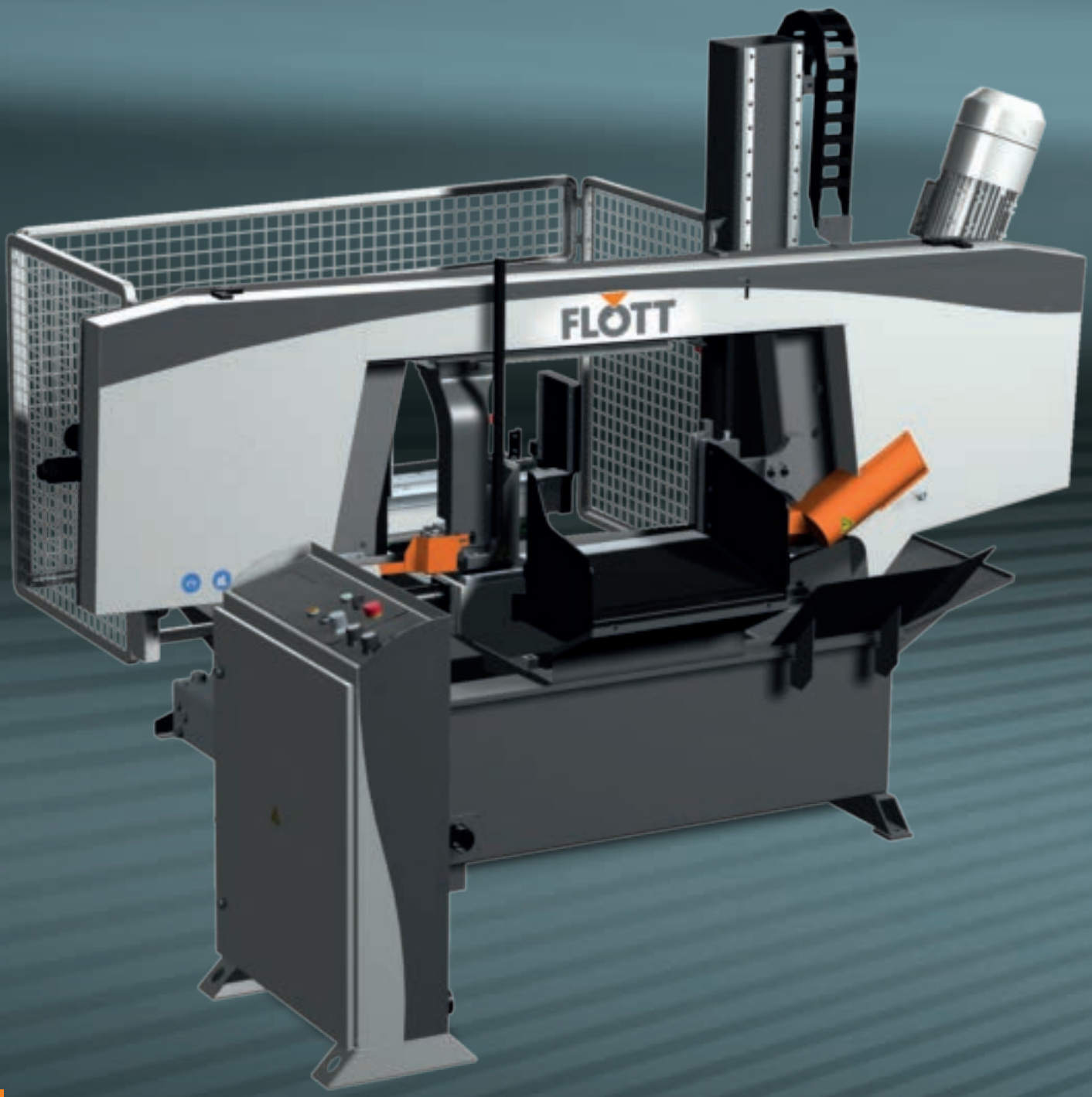

By standard

- 2-column fully-automatic horizontal band sawing machine for highly demanding industrial use
- The saw frame uses two robust columns and is guided on one side - free of play - in a pretensioned linear guide.
- Lifting height limitation of the saw frame by end switch
- Hydraulic cutting feed of the sawing arm with double-sided cutting pressure regulation
- 3-sided precision hard-metal guiding system of the sawing band to achieve best cutting results
- Synchronously driven chip removal brush
- Sawing Band tension- and sawing band breakage monitoring
- Fully hydraulic sawing:
  - Feeding of material (via plain bearing)
  - Feed length (single stroke) 600 mm (max.)
  - feeding via hydraulic cylinder
- Numbers of Cutting cycles (automatic mode): 999 (max.)
- Smallest diameter to be sawn is 10 mm
- Residual length of sawing material due to clamping: 25 mm (min.)
- **Please note:** Size limitation of workpiece/ smallest workpiece to be cut [L x H] is: 10 x 5 mm
- Freely positionable machine control unit with large display, easy to use with step-by-step programming
- Machine vices equipped with full stroke hydraulic cylinders
- Dual-pump hydraulic unit
- Hydraulic Bundle clamping device. Allows the clamping of multiple layers and bundles by an additional vertical clamping unit
- Clamping pressure regulation for vice
- LED-Work Light in "Cold White"
- Automatic chip conveyor located under the cutting area
- Installed coolant supply system with 45 l tank capacity
- incl. Sawing band with Combi Toothing 4/6
- Machine Colours:
  - Saw frame RAL 7035
  - Machine Corpus RAL 7005

Special equipment / Machine accessories

- Deviation control of the sawing band
  Order No. 570.062
- Indicator for Sawing feed speed
  Order No. 570.063
- Micro spraying system 24 V
  Order No. 570.254
- Additional 3rd. coolant supply
  Order No. 570.173
- Spray gun for chip cleaning
  Order No. 570.110
- Connection to Roller conveyor X-SR (Steel rollers), left , 550 mm wide (incl. Connection kit)
  Order No. 570.136
- Roller conveyor X-SR (Steel rollers x 4 pcs.), 550 mm wide, Basic version, Length: 2,000 mm , Weight load: 1,500 kg/mtr.
  Order No. 570.139
- Roller conveyor X-SR (Steel rollers x 6 pcs.), 550 mm wide, Basic version, Length: 3,000 mm , Weight load: 1,500 kg/mtr.
  Order No. 570.141
- Extension to Roller Conveyor X-SR (Steel rollers x 4 pcs.), Length: 2,000 mm, Weight load: 1,500 kg/ mtr.
  Order No. 570.143
- Extension to Roller Conveyor X-SR (Steel rollers x 6 pcs.), Length: 3,000 mm, Weight load: 1,500 kg/ mtr.
  Order No. 570.145

*This metal band saw does meet all requirements according the norm DIN EN 55011:2011-04 [Classification A]. In case of a malfunction, please contact the manufacturer.

FLOTT Machine Tools

Technical Data

Motor 3 Phase 400 V, frequency converted	4 kW
Saw Band Dimensions	6,020 x 41 x 1.3 mm
Flywheels Ø	550 mm
Cutting Speed	20-120 m/Min.
Clamping range of machine vice [max.]	520 mm
Working Height	780 mm
Machine Dimensions [W x D x H]	2,890 x 2,055 x 2,030 mm
Weight	1,600 kg

HBS 450 SANC

Order No.	**570.035**

Sawing Range

	0°
○	450
▭	520 x 450
□	450 x 450

HSS Bi-Metall (M42) Sawing Bands

Differently setted saw blades available on request

HBS 350 ANC	Dimensions in mm	Combi Toothing	Packing Unit (2 pcs.)
570.227	6,020 x 41 x 1.3	2/3	1
570.228	6,020 x 41 x 1.3	3/4	1
570.229	6,020 x 41 x 1.3	4/6	1
570.230	6,020 x 41 x 1.3	5/8	1
570.231	6,020 x 41 x 1.3	10/14	1

FOR MORE OPTIONS, PLEASE GO TO PAGE 111

Do you have any questions about available options and accessory articles, e.g. Roller conveyor systems? Please contact us. We will be happy to assist you!

FLOTT Metal Circular Saw KS 315 M

FLOTT Machine Tools

Universal circular saw with pivoting machine head (left/right) for miter cutting and two machine speeds

- Massive sturdy cast iron machine housing
- Oil bath supported reduction gear drive consisting of a bronze gear wheel with hardened and ground steel worm
- Quick clamping saw vice with double side fixture for double strength work piece fixation
- Durable, mechanical cooling solution pump
- Length adjustable arrester
- Operating tool kit
- Machine colour RAL 7037

Accessories

- Metal circular saw blades

This machine is also available as single phase 230 V AC version. Price on request!

Technical Data

Three phase 400 V AC motor (pole-changing)	1.3/1.9 kW
Dimension circular saw blade (Not included in delivery)	315 x 32 Ø mm
Vice span	110 mm
Capacity Tank Cooling Lubricant	5 l
Working height incl. foot stand	980 mm
2 Cutting Speeds	41/ 82 m/Min
Machine size unpacked with foot stand W x D x H	1,000 x 1,100 x 1,800 mm
Machine size packed with foot stand W x D x H	630 x 1,030 x 880 mm
Weight	128 kg

KS 315 M

Order No.	**560.835** (without foot stand)

Machine Foot Stand

Steel machine foot stand size packed W x D x H	250 x 720 x 840 mm
Order No.	**560.830**

Sawing

	45° left	0°	45° right
○	90	95	90
▭	80 x 70	100 x 70	80 x 70
□	75	80	75

Metal Circular saw blades (differently shaped saw blades available on request)

KS 315 M Order No.	Dimensions in mm	Number of Teeth	Packaging Unit
560.310	315 x 2.5 x 32	220	1
560.311	315 x 2.5 x 32	160	1

FOR MORE OPTIONS, PLEASE GO TO PAGE 111

Accessories for FLOTT Metal Sawing Machines

Metal Belt Saw Blades*
(Bi-Alfa Cobalt M42)

HBS 225 MA / HBS 225 A

- 2,720 x 27 x 0.9 mm, Packing Unit 1 set (2 pcs)

Combi toothing 4/6
Order No. 570.200

Combi toothing 5/8
Order No. 570.201

Combi toothing 6/10
Order No. 570.202

Combi toothing 10/14
Order No. 570.203

HBS 250 A / HBS 250 HA

- 2,910 x 27 x 0.9 mm, Packing Unit 1 set (2 pcs)

Combi toothing 2/3
Order No. 570.206

Combi toothing 3/4
Order No. 570.207

Combi toothing 4/6
Order No. 570.208

Combi toothing 5/8
Order No. 570.209

Combi toothing 10/14
Order No. 570.210

HBS 350 HA / HBS 350 ANC / HBS 350 SANC

- 4,780 x 34 x 1.1 mm, Packing Unit 1 set (2 pcs)

Combi toothing 2/3
Order No. 570.213

Combi toothing 3/4
Order No. 570.214

Combi toothing 4/6
Order No. 570.215

Combi toothing 5/8
Order No. 570.216

Combi toothing 10/14
Order No. 570.217

HBS 450 HA

- 5,200 x 34 x 1.1 mm, Packing Unit 1 set (2 pcs)

Combi toothing 2/3
Order No. 570.220

Combi toothing 3/4
Order No. 570.221

Combi toothing 4/6
Order No. 570.222

Combi toothing 5/8
Order No. 570.223

HBS 450 SANC

- 6,020 x 41 x 1.3 mm, Packing Unit 1 set (2 pcs)

Combi toothing 2/3
Order No. 570.227

Combi toothing 3/4
Order No. 570.228

Combi toothing 4/6
Order No. 570.229

Combi toothing 5/8
Order No. 570.230

Combi toothing 10/14
Order No. 570.231

Cooling and lubrication liquids

TSF 5

- 5 l can transparent, water soluble high compound fluid
- Chemically neutral
- Skin friendly
- Non-foaming
- Innovative composition avoiding bacterial degradation
- without emulgent and non adhesive

Order No...... **560.841**

Fluid 5

- 5 l can environment-friendly cutting liquid based on colza oil with high-performance lubrication
- Suitable for micro lubrication units
- Improves cutting performance
- Guarantees mid-life-update of machines and tools
- For undiluted use

Order No...... **560.842**

Race and discharge way

- On request

Minimum lubrication unit

- On request

*Differing circular saw blades on request

Accessories for FLOTT Metal Sawing Machines

Flexible roller conveyor system solutions, measuring stops and accessories for the FLOTT sawing machine program

Roller Conveyor System L-SR/K330

Highly flexible handling solution for best processing of medium weight materials. Thanks to the unique profile of the system, the roller conveyors can be perfectly adapted to customer requirements.

Manual Measuring Stop

The bearing surface of the measuring stop allows a stabile fixing of the material for a perfect cutting to the desired length.

Digital Measuring Stop - Display

The measuring stop is manually adjustable and its position is accurately displayed on the display (accuracy: 0.1 mm) The stop arm can be folded-up for best passage of the material.

Digital Measuring Stop

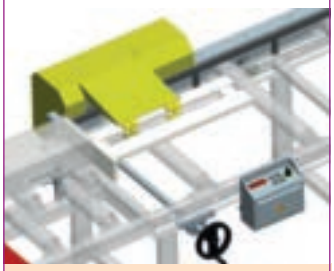

Digital material stop with handwheel and pneumatic braking system.

Measuring- & End Stop systems

Material Stop Systems. From simple to use and comfortable, manual Length Measuring Systems up to NC controlled Measuring Systems with internal hard drive to store programs

Hydraulic Bundle Clamping Systems

Allows the clamping of multiple layers and bundles by an additional vertical clamping unit.

Roll-off Protection

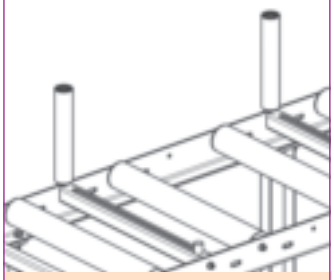

The Roll-off Prevention System is used to prevent pipes and other round materials from uncontrolled rolling-off the roller conveyor. Rolling-off of material may cause highly dangerous situations for the operating personnel and persons located in the machine environment.

NC Controlled Material Feeding

Vertical Rollers

Due to their optimal arrangement, the vertical rollers ensure proper squareness, simple processing of the material combined with better labor safety for the sawing machine operator and people located in the direct surrounding of the sawing machine.

Adjustable Vertical Rollers

For safe and perfect cutting of layers- and bundles of material adjustable vertical rollers are irreplaceable. In combination with fixed vertical rollers the layers or bundles are kept perfectly aligned and shaped for best cutting results.

Plastic Rollers Series L-K

Rollers are made from robust, highly durable and high quality industrial plastic to prevent senitive Materials from being scratched or damaged while processed.

Connecting Parts

For all Band Sawing machines there are connecting parts available for a perfect connection to the roller conveyor system needed.

Additional Safety Systems to meet individual requirements are available on request

FLOTT Spare Parts

All FLOTT products are long lasting and highly reliable. However, if once, usually after many years, a spare part is needed we will deliver it quickly.*

Please note: To ensure a quick processing of your spare part request please provide the machine type and machine number with your order!

Extract from our terms of delivery

- Delivery is ex works, excluding packaging
  Place of dispatch: 42857 Remscheid, Germany
- Seaworthy packaging is available at extra cost
- Standard colours for FLOTT products are:
  - Drill presses RAL 7005
  - Grinding machines RAL 9007
  - Sawing machines: Saw frame RAL 7035; machine body RAL 7005
- FLOTT reserves the right to carry out design- and/or dimensional changes during the term of a contract.
- Recommended retail prices are exclusive of applicable VAT.
- All machine prices, accessories and spare parts are exclusive of packaging
- The limited warranty for Flott machines is based on single shift operation starting at date of delivery
  - 36 months for drill presses
  - 12 months for GB 50 MV, GB 50 MV plus, SB P50 STG MV, GB 70 MV plus and BFM 40
  - 12 months for grinding and sawing machines based on single-shift operation starting at date of delivery
  - Spare parts are excluded
- Please visit the FLOTT website at www.flott.de for our full terms and conditions

FLOTT Distribution and Service partners worldwide

Great Britain
Damar International Ltd.
Clipper Road Troon Ind'l
LE4 9 JE LEICESTER
Great Britain
Phone: +44 / 1162 764 144
Fax: +44 / 1162 460 663
e-Mail: sales@damar.biz
WEB: www.damar.biz

Belgium
Promac Bvba
Meerstraat 331
1840 Londerzeel
Belgium
Phone: +32 / 52 / 302 082
Fax: +32 / 52 / 306 523
e-Mail: info@promac.be
WEB: www.promac.be

Netherlands
Hegner & Ko.
Fermiweg 16
3208 KT Spijkenisse
Netherlands
Phone: +31 / 181 / 647 535
Fax: +31 / 181 / 647 311
e-Mail: rob@hegner.nl
WEB: www.hegner.nl

Czech Republic
APJ Praha sro
Trebizskeho 7
12000 Praha 2
Czech Republic
Phone: +420 / 22 22 503 85
Fax: +420 / 22 22 503 85
e-Mail: apj@apj.cz

South America
DANTHATEX – Representação Comercial Ltda
Avenida Brasil, 190 – sala 63
Barueri – São Paulo
Brazil
Phone: +55 / 11 / 4198-3785
Mobile: +55 / 11 / 7269-5959
e-mail: danthatex_gilson@terra.com.br

Egypt
Serco – Société Egyptienne Réunie Pour Le Commerce
3A Soliman El-Halabi St., Downtown
Cairo, 11111
Egypt
Phone: +20 / 22 57 42441
+20 / 22 57 70205
Fax: +20 / 22 57 48559
Mobile: +20 / 12318 7656
e-Mail: serco@link.net

Notes